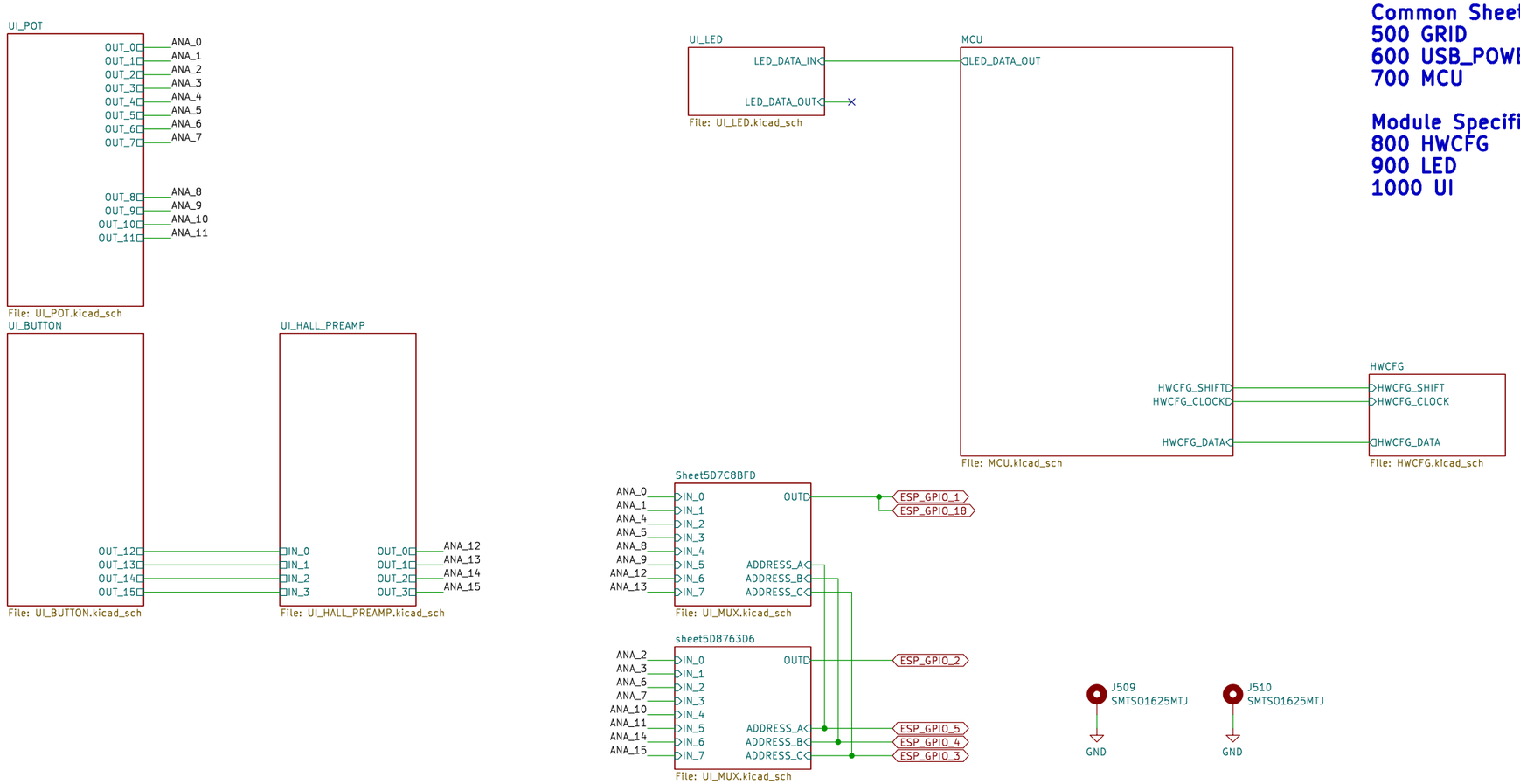

Common Sheets:
500 GRID
600 USB_POWER
700 MCU

Module Specific:
800 HWCFG
900 LED
1000 UI

Sheet: /
File: PCBA-PBF4.kicad_sch

Title:

Size: A3	Date:	Rev:
KiCad E.D.A. 8.0.8		Id: 1/15

1000

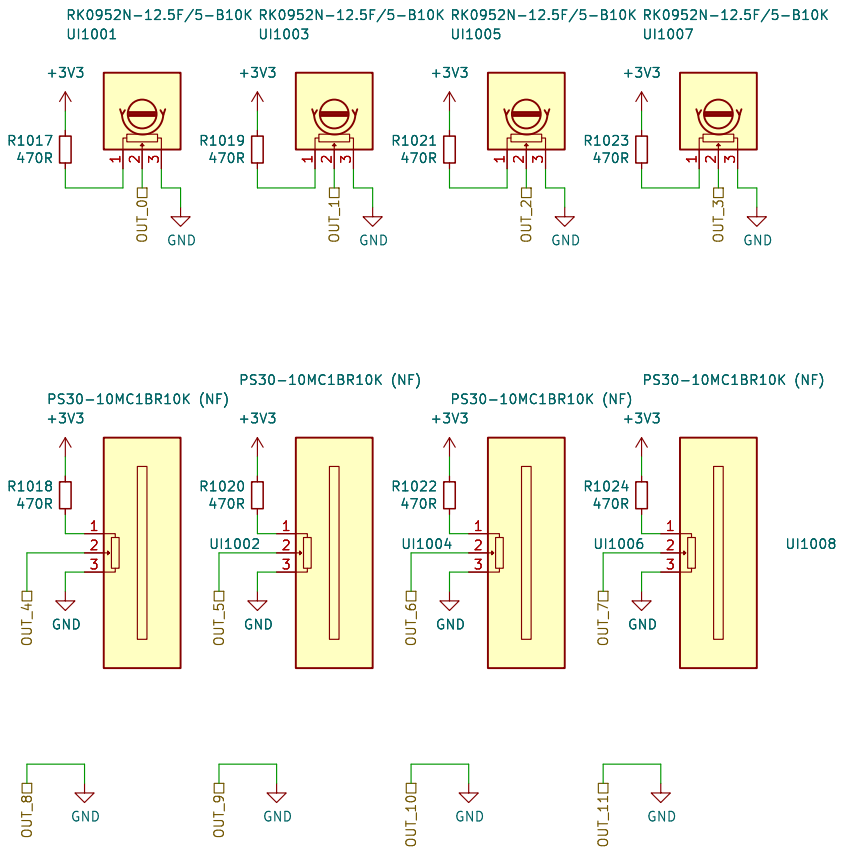

Sheet: /UI_POT/
File: UI_POT.kicad_sch

Title:

Size: A4	Date:	Rev:
KiCad E.D.A. 8.0.8		Id: 2/15

1000

Simulation:

http://tinyurl.com/y229mty4

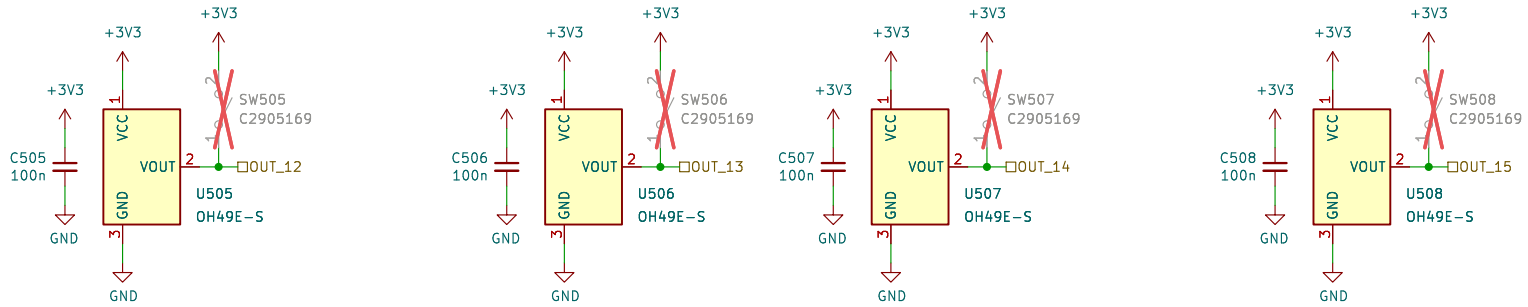

Sheet: /UI_BUTTON/
File: UI_BUTTON.kicad_sch

Title:

Size: A4	Date:	Rev:
KiCad E.D.A. 8.0.8		Id: 3/15

900

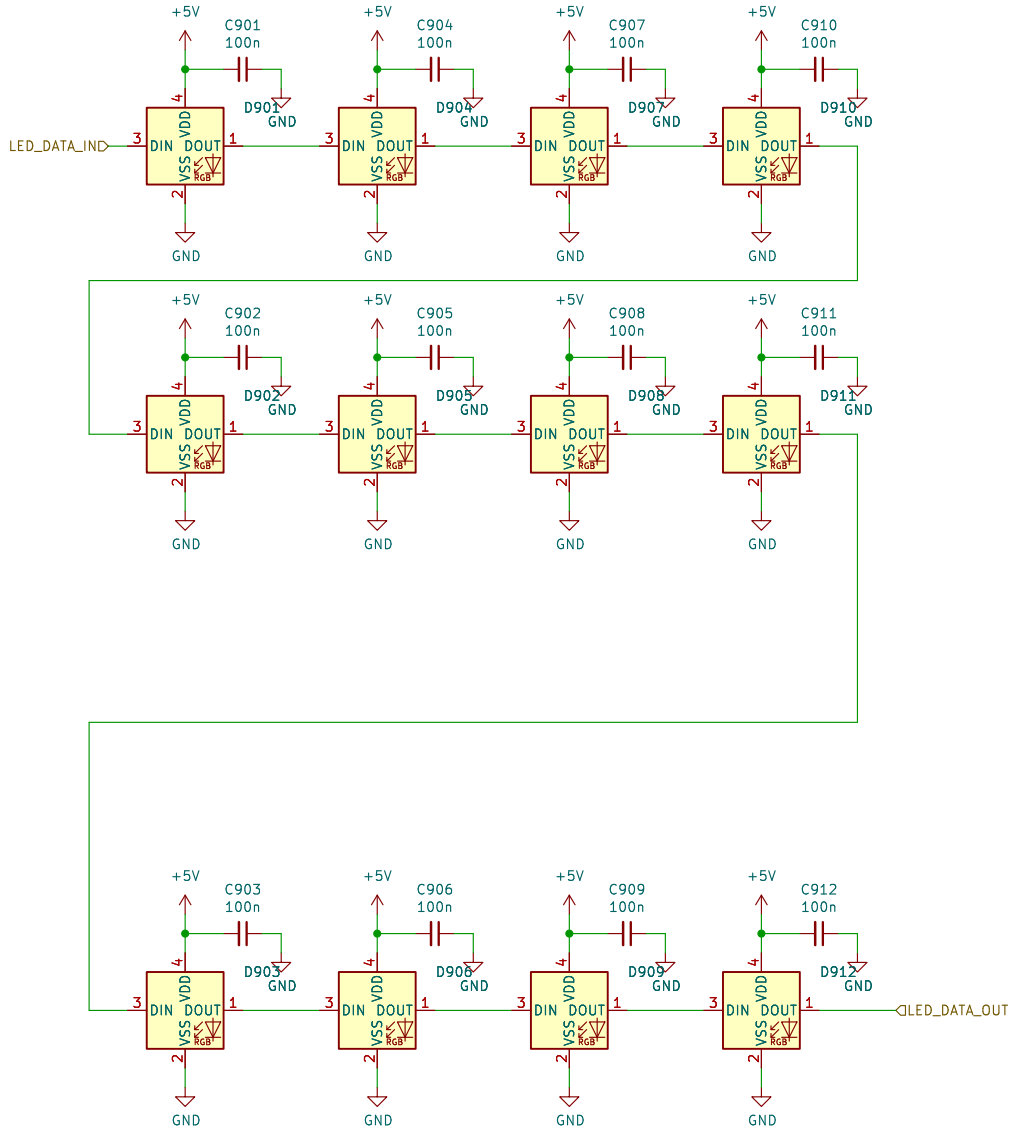

Sheet: /UI_LED/
File: UI_LED.kicad_sch

Title:

Size: A4	Date:	**Rev:**
KiCad E.D.A. 8.0.8		Id: 4/15

1000

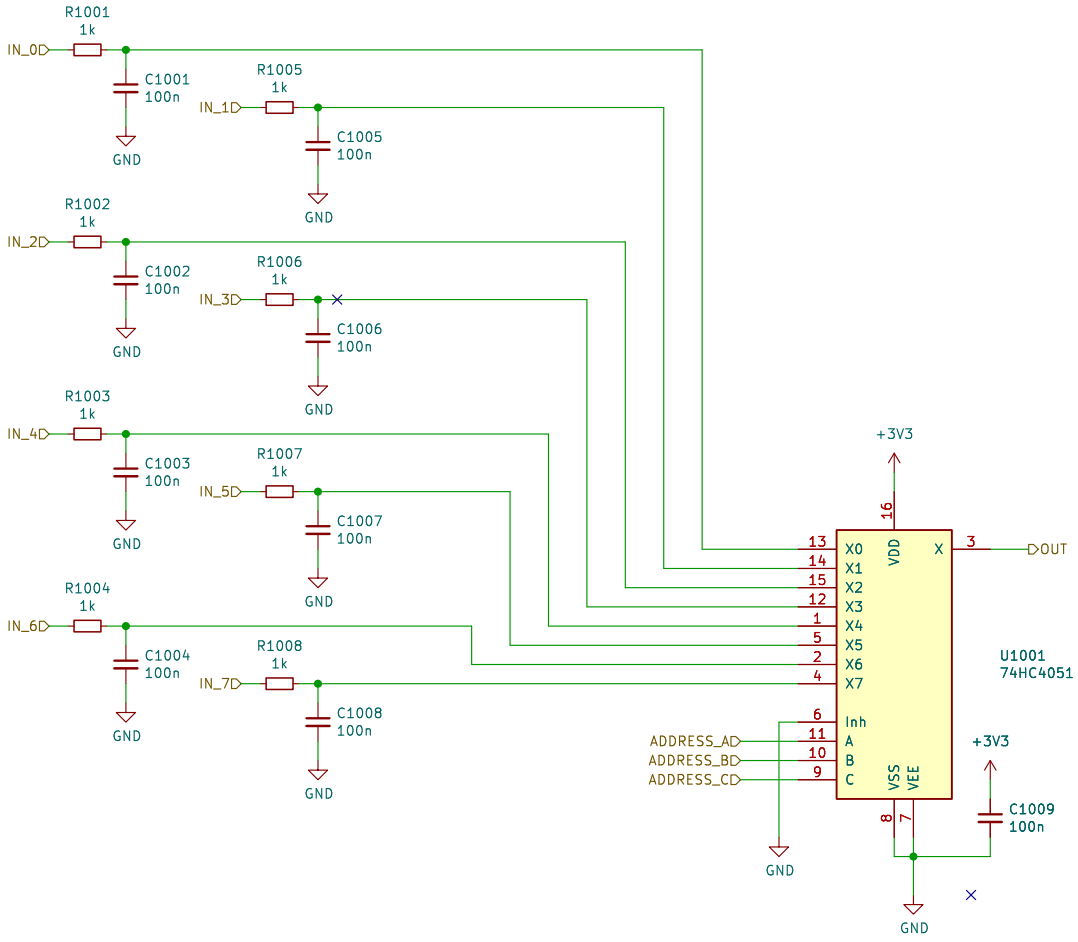

Sheet: /Sheet5D7C8BFD/
File: UI_MUX.kicad_sch

Title:

Size: A4	Date:	Rev:
KiCad E.D.A. 8.0.8		Id: 5/15

1000

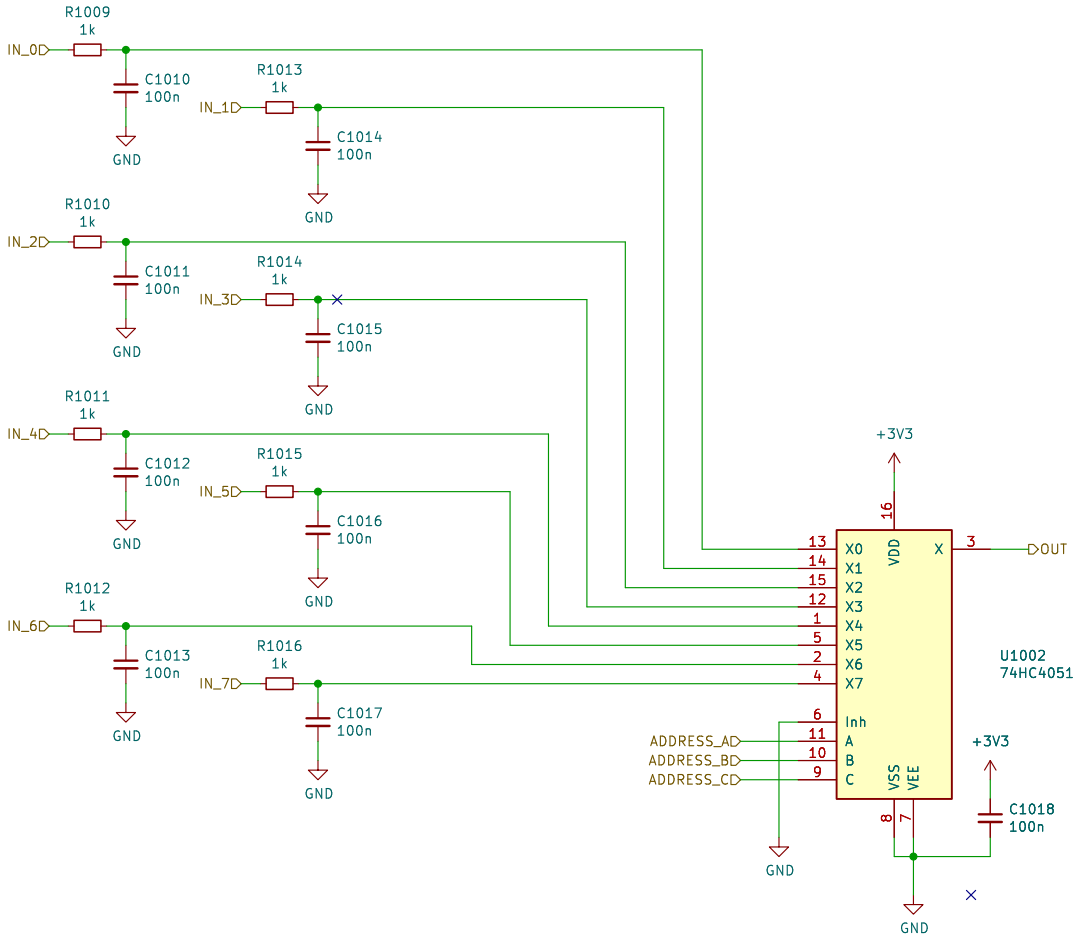

Sheet: /sheet5D8763D6/
File: UI_MUX.kicad_sch

Title:

Size: A4	Date:	Rev:
KiCad E.D.A. 8.0.8		Id: 6/15

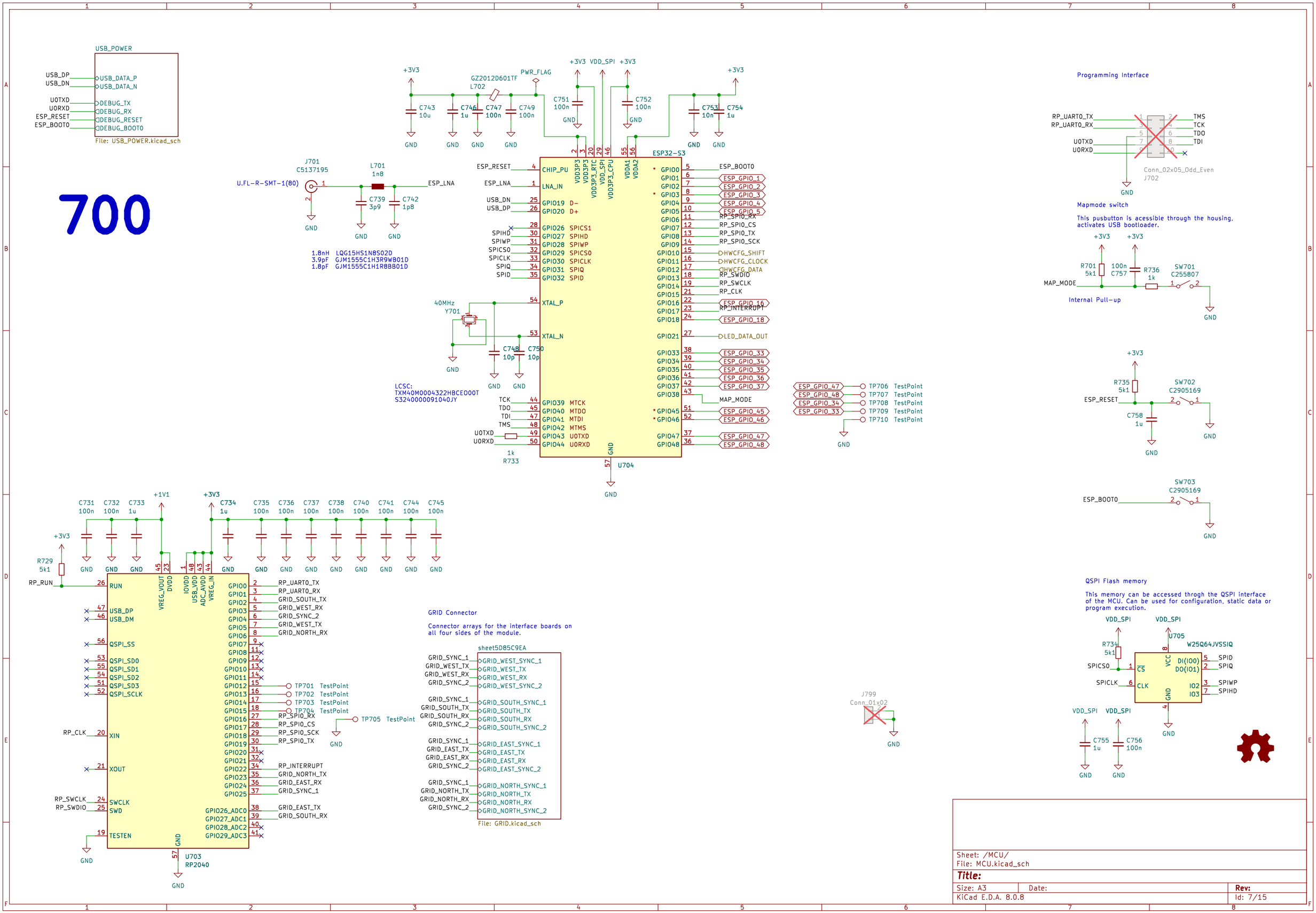
USB_POWER
USB_DP
USB_DN
U0TXD
U0RXD
ESP_RESET
ESP_BOOT0
USB_DATA_P
USB_DATA_N
DEBUG_TX
DEBUG_RX
DEBUG_RESET
DEBUG_BOOT0
File: USB_POWER.kicad_sch
700
+3V3
GZ2012D601TF
L702
PWR_FLAG
VDD_SPI
C743 10u
C746 1u
C747 100n
C749 100n
C751 100n
C752 100n
C753 10n
C754 1u
GND
J701
C5137195
U.FL-R-SMT-1(80)
L701
1n8
ESP_LNA
C739 3p9
C742 1p8
1.8nH LQG15HS1N8S02D
3.9pF GJM1555C1H3R9WB01D
1.8pF GJM1555C1H1R8BB01D
ESP32-S3
CHIP_PU
LNA_IN
GPIO19 D-
GPIO20 D+
GPIO26 SPICS1
GPIO27 SPIHD
GPIO28 SPIWP
GPIO29 SPICS0
GPIO30 SPICLK
GPIO31 SPIQ
GPIO32 SPID
XTAL_P
XTAL_N
GPIO39 MTCK
GPIO40 MTDO
GPIO41 MTDI
GPIO42 MTMS
GPIO43 U0TXD
GPIO44 U0RXD
VDD3P3
VDD3P3_RTC
VDD3P3_CPU
VDD_SPI
VDDA1
VDDA2
GPIO0
GPIO1
GPIO2
GPIO3
GPIO4
GPIO5
GPIO6
GPIO7
GPIO8
GPIO9
GPIO10
GPIO11
GPIO12
GPIO13
GPIO14
GPIO15
GPIO16
GPIO17
GPIO18
GPIO21
GPIO33
GPIO34
GPIO35
GPIO36
GPIO37
GPIO38
GPIO45
GPIO46
GPIO47
GPIO48
ESP_BOOT0
ESP_GPIO_1
ESP_GPIO_2
ESP_GPIO_3
ESP_GPIO_4
ESP_GPIO_5
RP_SPIO_RX
RP_SPIO_CS
RP_SPIO_TX
RP_SPIO_SCK
HWCFG_SHIFT
HWCFG_CLOCK
HWCFG_DATA
RP_SWDIO
RP_SWCLK
RP_CLK
ESP_GPIO_16
RP_INTERRUPT
ESP_GPIO_18
LED_DATA_OUT
ESP_GPIO_33
ESP_GPIO_34
ESP_GPIO_35
ESP_GPIO_36
ESP_GPIO_37
MAP_MODE
ESP_GPIO_45
ESP_GPIO_46
ESP_GPIO_47
ESP_GPIO_48
40MHz
Y701
C748 10p
C750 10p
LCSC:
TXM40M0004322HBCE00T
S3240000091040JY
TCK
TDO
TDI
TMS
U0TXD
U0RXD
1k
R733
U704
TP706 TestPoint
TP707 TestPoint
TP708 TestPoint
TP709 TestPoint
TP710 TestPoint
Programming Interface
RP_UART0_TX
RP_UART0_RX
U0TXD
U0RXD
TMS
TCK
TDO
TDI
Conn_02x05_Odd_Even
J702
Mapmode switch
This pusbutton is acessible through the housing, activates USB bootloader.
R701 5k1
100n C757
R736 1k
SW701 C255807
MAP_MODE
Internal Pull-up
R735 5k1
SW702 C2905169
ESP_RESET
C758 1u
SW703 C2905169
ESP_BOOT0
C731 100n
C732 100n
C733 1u
+1V1
C734 1u
C735 100n
C736 100n
C737 100n
C738 100n
C740 100n
C741 100n
C744 100n
C745 100n
R729 5k1
RP_RUN
RUN
USB_DP
USB_DM
QSPI_SS
QSPI_SD0
QSPI_SD1
QSPI_SD2
QSPI_SD3
QSPI_SCLK
RP_CLK
XIN
XOUT
RP_SWCLK
RP_SWDIO
SWCLK
SWD
TESTEN
VREG_VOUT
DVDD
IOVDD
USB_VDD
ADC_AVDD
VREG_IN
GPIO0
GPIO1
GPIO2
GPIO3
GPIO4
GPIO5
GPIO6
GPIO7
GPIO8
GPIO9
GPIO10
GPIO11
GPIO12
GPIO13
GPIO14
GPIO15
GPIO16
GPIO17
GPIO18
GPIO19
GPIO20
GPIO21
GPIO22
GPIO23
GPIO24
GPIO25
GPIO26_ADC0
GPIO27_ADC1
GPIO28_ADC2
GPIO29_ADC3
RP_UART0_TX
RP_UART0_RX
GRID_SOUTH_TX
GRID_WEST_RX
GRID_SYNC_2
GRID_WEST_TX
GRID_NORTH_RX
TP701 TestPoint
TP702 TestPoint
TP703 TestPoint
TP704 TestPoint
TP705 TestPoint
RP_SPIO_RX
RP_SPIO_CS
RP_SPIO_SCK
RP_SPIO_TX
RP_INTERRUPT
GRID_NORTH_TX
GRID_EAST_RX
GRID_SYNC_1
GRID_EAST_TX
GRID_SOUTH_RX
U703
RP2040
GRID Connector
Connector arrays for the interface boards on all four sides of the module.
sheet5D85C9EA
GRID_SYNC_1
GRID_WEST_TX
GRID_WEST_RX
GRID_SYNC_2
GRID_WEST_SYNC_1
GRID_WEST_TX
GRID_WEST_RX
GRID_WEST_SYNC_2
GRID_SYNC_1
GRID_SOUTH_TX
GRID_SOUTH_RX
GRID_SYNC_2
GRID_SOUTH_SYNC_1
GRID_SOUTH_TX
GRID_SOUTH_RX
GRID_SOUTH_SYNC_2
GRID_SYNC_1
GRID_EAST_TX
GRID_EAST_RX
GRID_SYNC_2
GRID_EAST_SYNC_1
GRID_EAST_TX
GRID_EAST_RX
GRID_EAST_SYNC_2
GRID_SYNC_1
GRID_NORTH_TX
GRID_NORTH_RX
GRID_SYNC_2
GRID_NORTH_SYNC_1
GRID_NORTH_TX
GRID_NORTH_RX
GRID_NORTH_SYNC_2
File: GRID.kicad_sch
J799
Conn_01x02
QSPI Flash memory
This memory can be accessed throgh the QSPI interface of the MCU. Can be used for configuration, static data or program execution.
R734 5k1
U705
W25Q64JVSSIQ
SPICS0
SPICLK
CS
CLK
VCC
GND
DI(IO0)
DO(IO1)
IO2
IO3
SPID
SPIQ
SPIWP
SPIHD
C755 1u
C756 100n
Sheet: /MCU/
File: MCU.kicad_sch
Title:
Size: A3
Date:
Rev:
KiCad E.D.A. 8.0.8
Id: 7/15

GRID Connector
Bi-Directional Data
2x SYNC

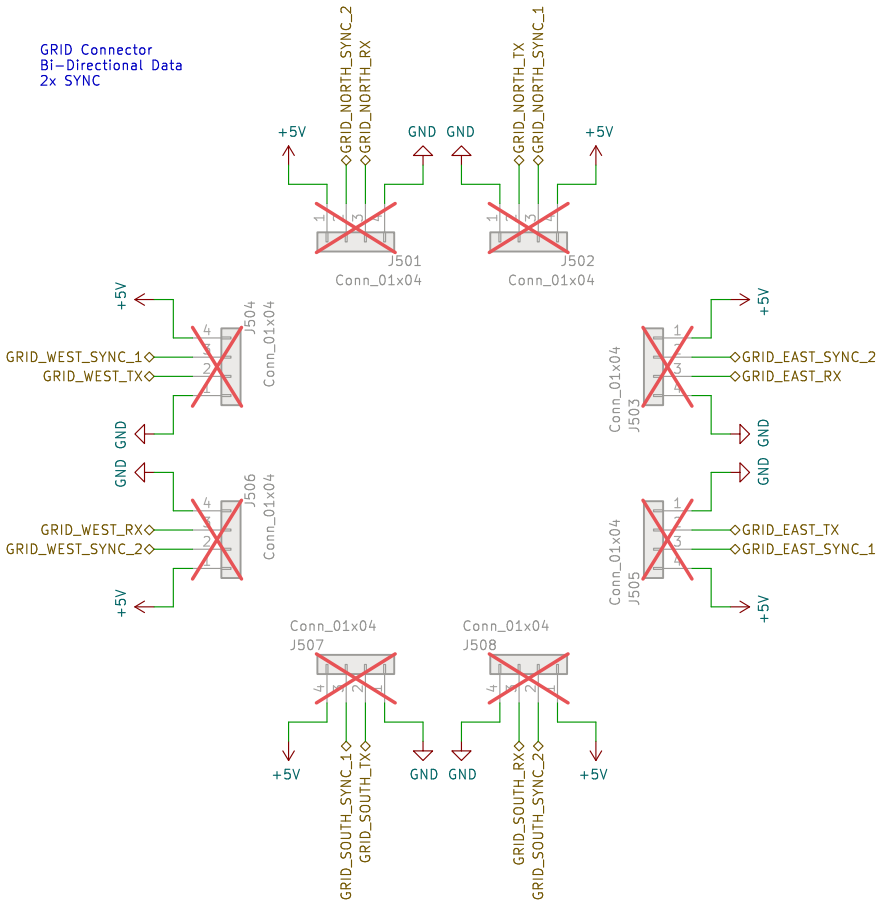

Board Mounting Pattern

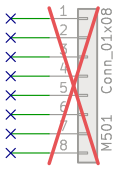

500

Sheet: /MCU/sheet5D85C9EA/
File: GRID.kicad_sch

Title:

Size: A4	Date:	Rev:
KiCad E.D.A. 8.0.8		Id: 8/15

600

USB Port

USB C upstream facing port configured for 5V 3A power consumption.

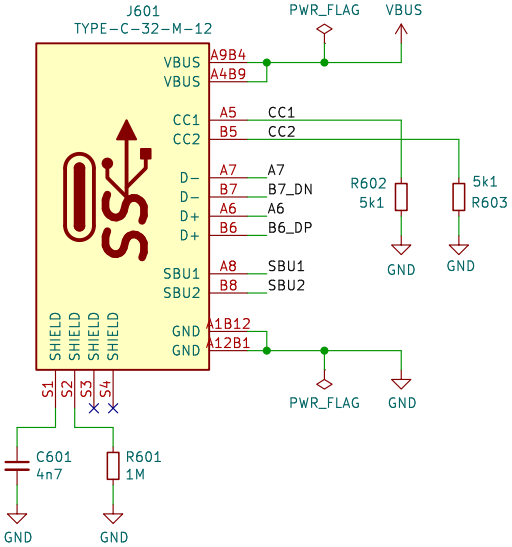

ESD Prot.

ESP protection for all 8 signals externally accessable via the USB C connector.

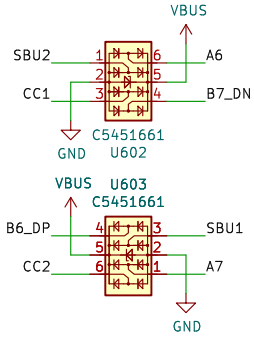

Debug-Mode Multiplexing

Debug.mode is activated when both CC1 and CC2 are pulled to logic high externally.

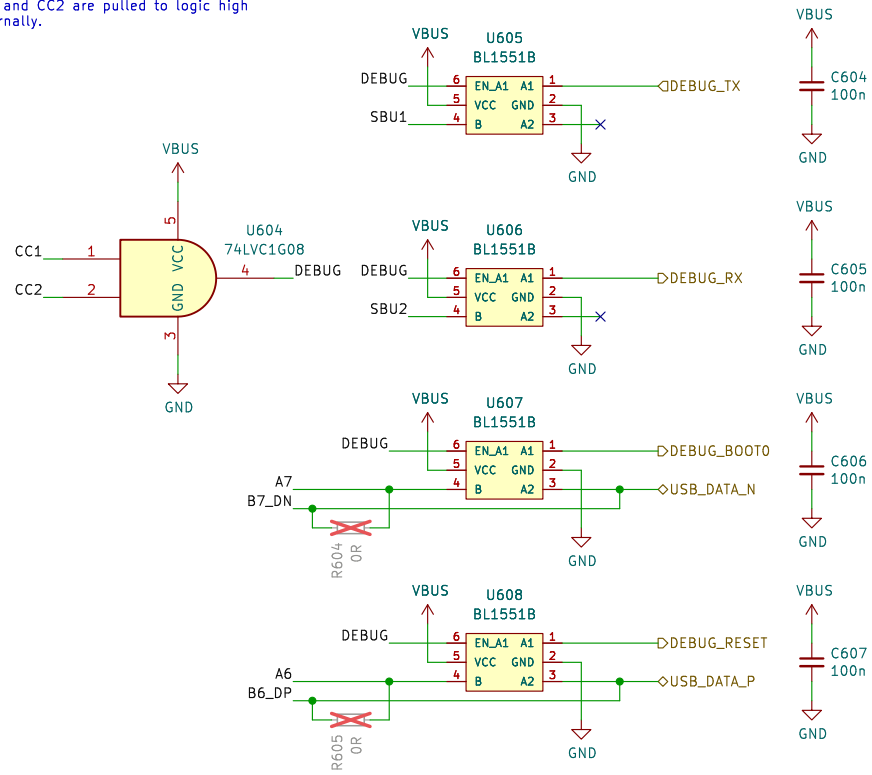

3V3 LDO

LDO regulator for generating the +3V3 power rail for the microcontroller and UI.

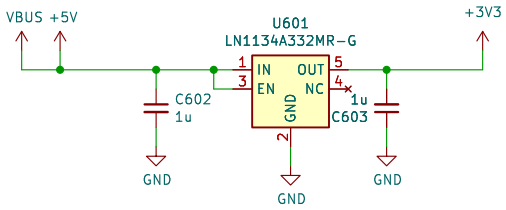

Testpoints

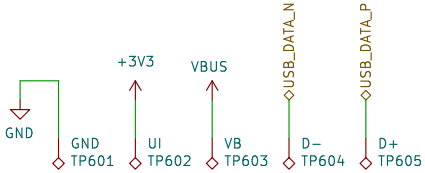

Sheet: /MCU/USB_POWER/
File: USB_POWER.kicad_sch

Title:

Size: A4	Date:	Rev:
KiCad E.D.A. 8.0.8		Id: 9/15

800

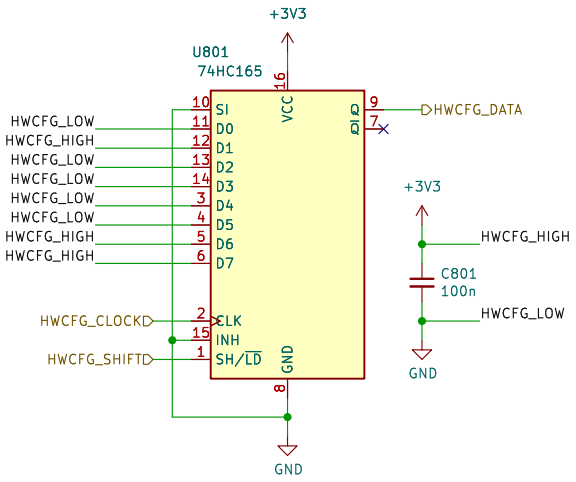

Board Identification

Grid firmware can identify the hardware and the board revision thorugh a 3 wire serial interface using one or more shift register as read only memory. The content of the memory is defined by pulling the inputs high or low through pcb traces or solderable configuration jumpers.

4b'Model + 4b'Revision + nb'Reserved (Multiple shift registers)

D0: MODEL (LSB)
D1: MODEL
D2: MODEL
D3: MODEL (MSB)
D4: REVISION (LSB)
D5: REVISION
D6: REVISION
D7: REVISION (MSB)

Model Codes (D3–D0):

Po16 0000
Bo16 0001
PBF4 0010
EN16 0011
...

Revision Codes (D7–D4):

RevA 0000
RevB 0001
RevC 0010
RevD 0011
...

Sheet: /HWCFG/ File: HWCFG.kicad_sch		
Title:		
Size: A4	Date:	**Rev:**
KiCad E.D.A. 8.0.8		Id: 10/15

simulation

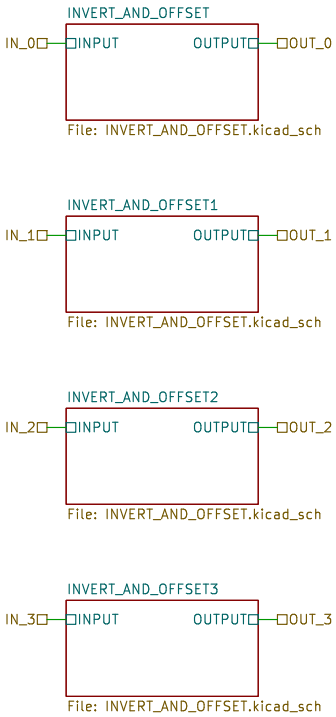

Sheet: /UI_HALL_PREAMP/
File: UI_HALL_PREAMP.kicad_sch

Title:

Size: A4	Date:	**Rev:**
KiCad E.D.A. 8.0.8		Id: 11/15

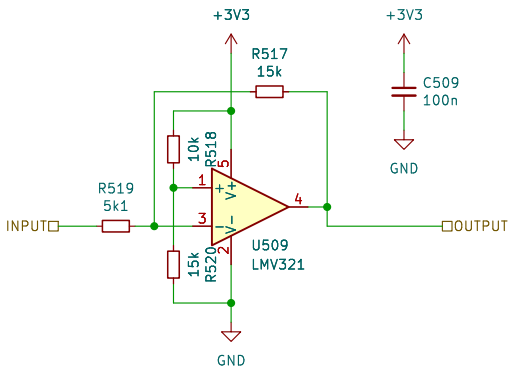

Sheet: /UI_HALL_PREAMP/INVERT_AND_OFFSET/
File: INVERT_AND_OFFSET.kicad_sch

Title:

Size: A4	Date:	**Rev:**
KiCad E.D.A. 8.0.8		Id: 16/15

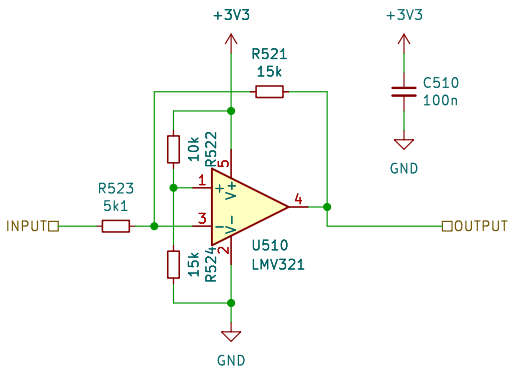

Sheet: /UI_HALL_PREAMP/INVERT_AND_OFFSET1/
File: INVERT_AND_OFFSET.kicad_sch

Title:

Size: A4	Date:	**Rev:**
KiCad E.D.A. 8.0.8		Id: 17/15

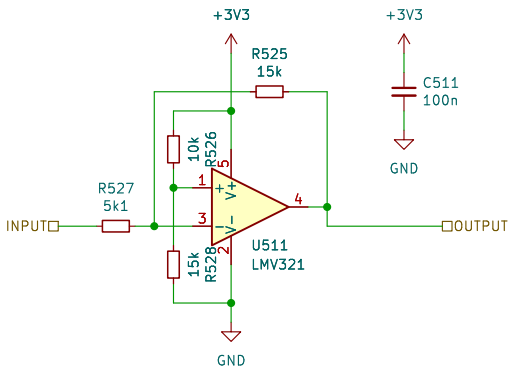

Sheet: /UI_HALL_PREAMP/INVERT_AND_OFFSET2/
File: INVERT_AND_OFFSET.kicad_sch

Title:

Size: A4	Date:	**Rev:**
KiCad E.D.A. 8.0.8		Id: 18/15

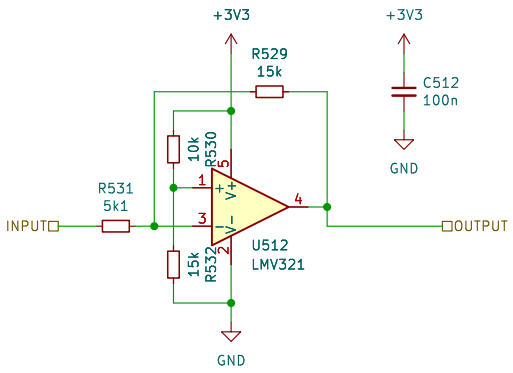

Sheet: /UI_HALL_PREAMP/INVERT_AND_OFFSET3/
File: INVERT_AND_OFFSET.kicad_sch

Title:

Size: A4	Date:	**Rev:**
KiCad E.D.A. 8.0.8		Id: 19/15