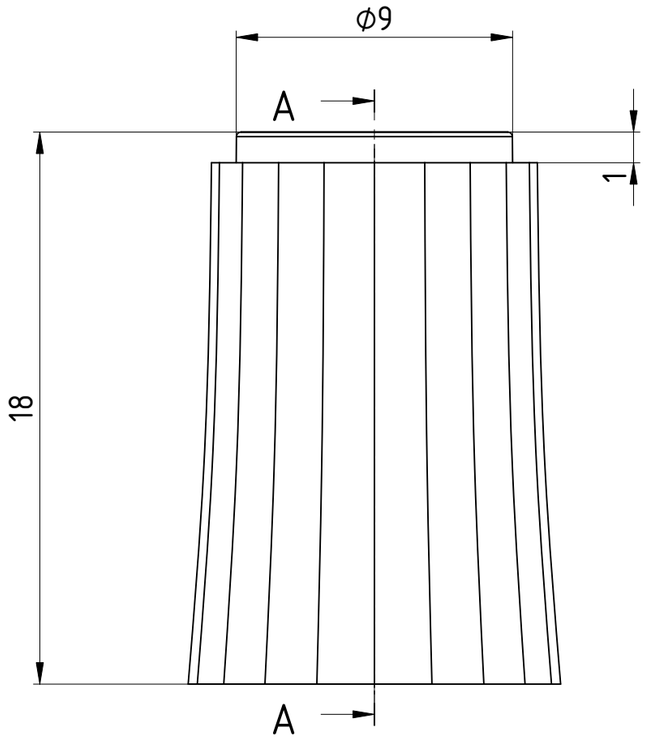

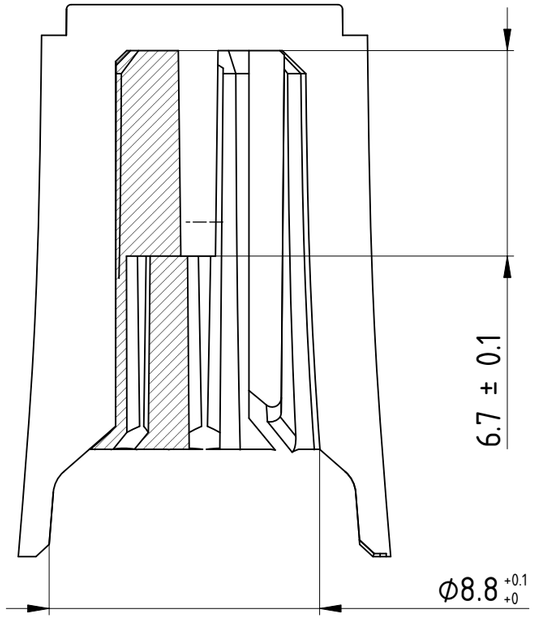

Section A-A

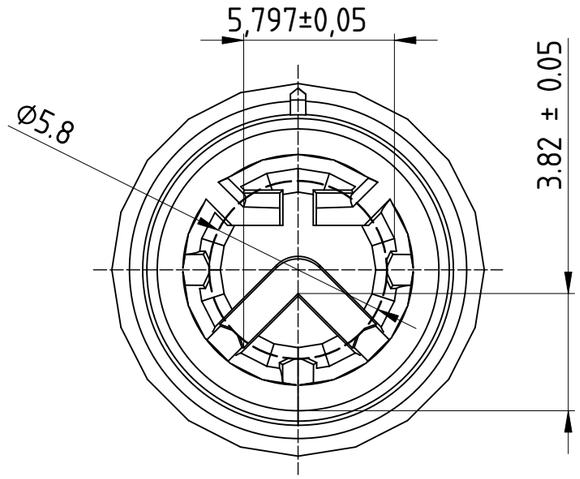

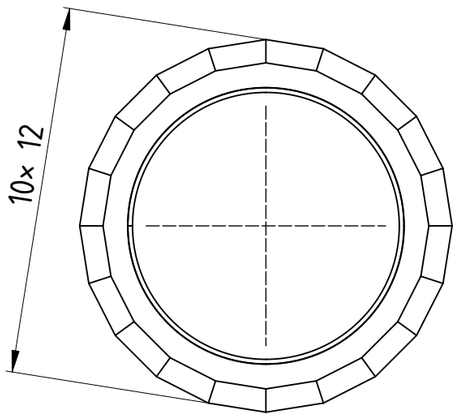

AESTHETICAL SURFACES:
COLORED BLUE ON THE ISOMETRIC VIEWS: SPI - D2 02
NO BURRS, NO PARTING LINES,
NO EJECTION MARKS
FREE OF ANY DEFECTS
FREE OF ANY WELD OR MELD LINES 02
NON VISIBLE GATE LOCATION ALLOWED
REMAINING BLACK SURFACES: SPI - B2

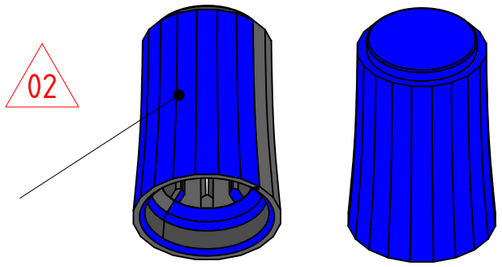

STATUS APPROVED DATE: 2024/01/02		PLASTIC - KNOB - POT
COMPANY Intech Studio Ltd.		
REVISION 02		MATERIAL ABS - Terluran GP22
SCALE 5:1	TOLERANCES DIN 16742-TG4	COLOR Black - RAL code: 9004