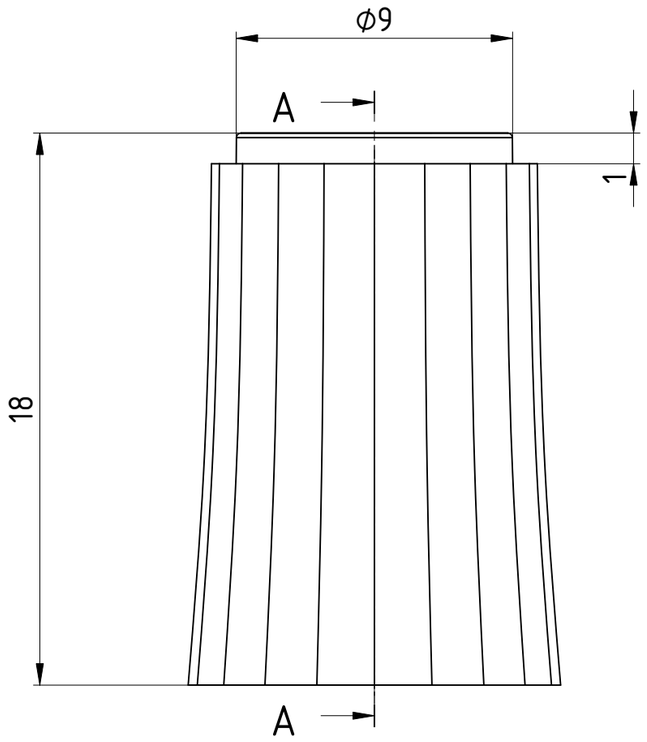


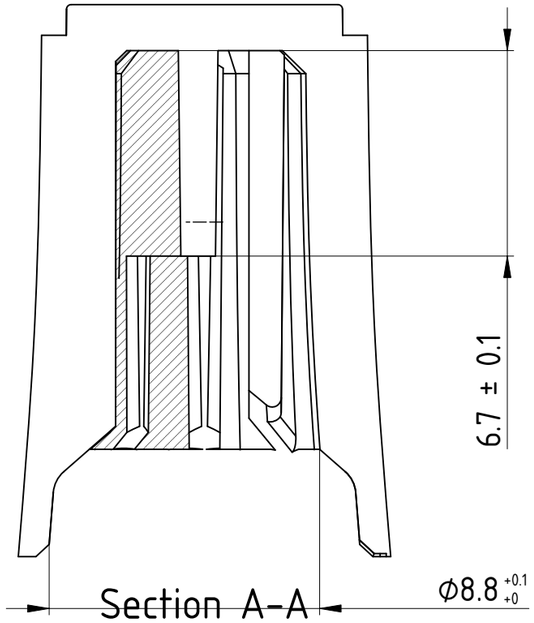


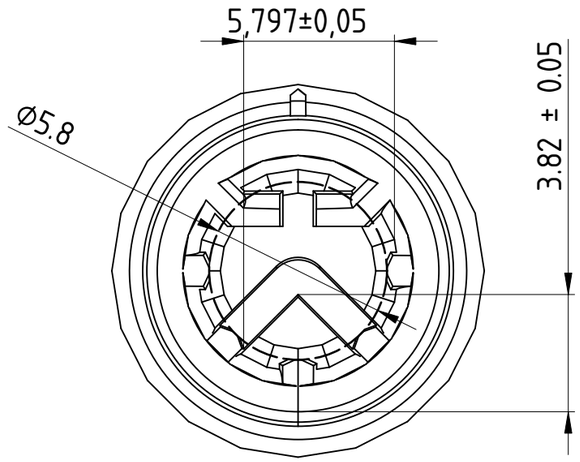


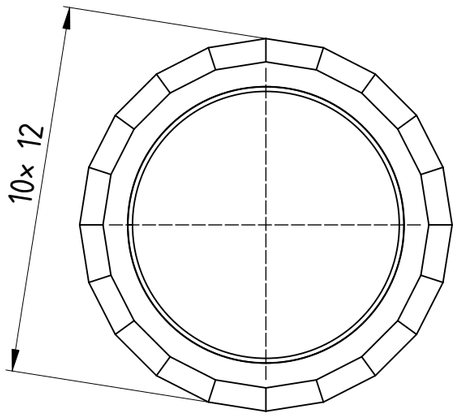


NO EJECTION MARKS

FREE OF ANY DEFECTS

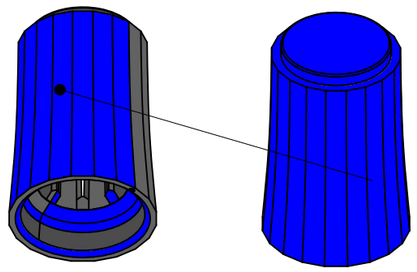

| | | |
|---|---|---|
| STATUS<br>APPROVED<br>DATE:<br>2024/01/02 | | PLASTIC - KNOB - ENC |
| COMPANY<br>Intech Studio Ltd. | | |
| REVISION<br>02 | | MATERIAL<br>ABS - Terluran GP22 |
| SCALE<br>5:1 | TOLERANCES<br>DIN 16742-TG4 | COLOR<br>Black - RAL code: 9004 |