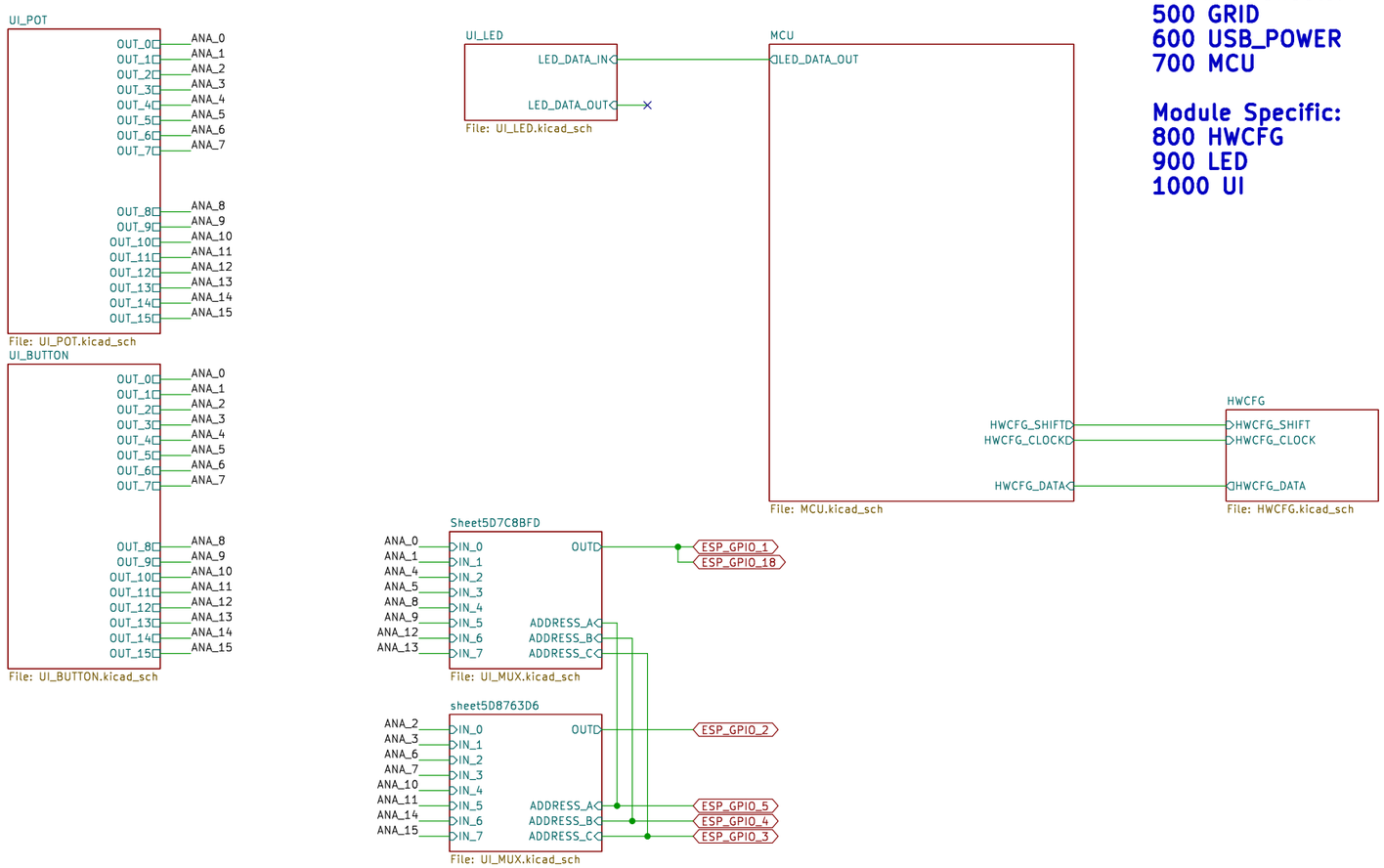


**Common Sheets:**
**500 GRID**
**600 USB_POWER**
**700 MCU**

**Module Specific:**
**800 HWCFG**
**900 LED**
**1000 UI**

Sheet: /
File: PCBA-P016.kicad_sch

**Title:**

| Size: A3 | Date: | Rev: |
|---|---|---|
| KiCad E.D.A. 8.0.8 | | Id: 1/10 |

# 1000

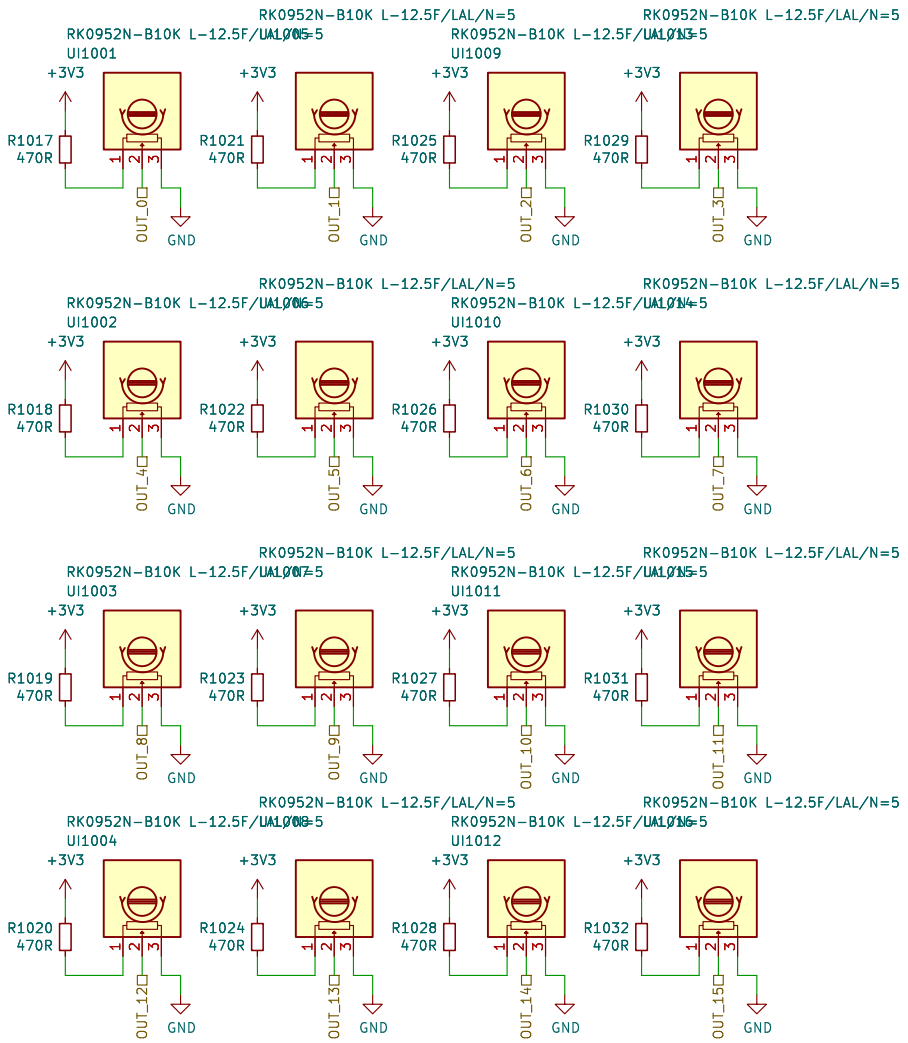


Sheet: /UI_POT/
File: UI_POT.kicad_sch

**Title:**

| Size: A4 | Date: | Rev: |
|---|---|---|
| KiCad E.D.A. 8.0.8 | | Id: 2/10 |

# 1000

Simulation:

http://tinyurl.com/y229mty4

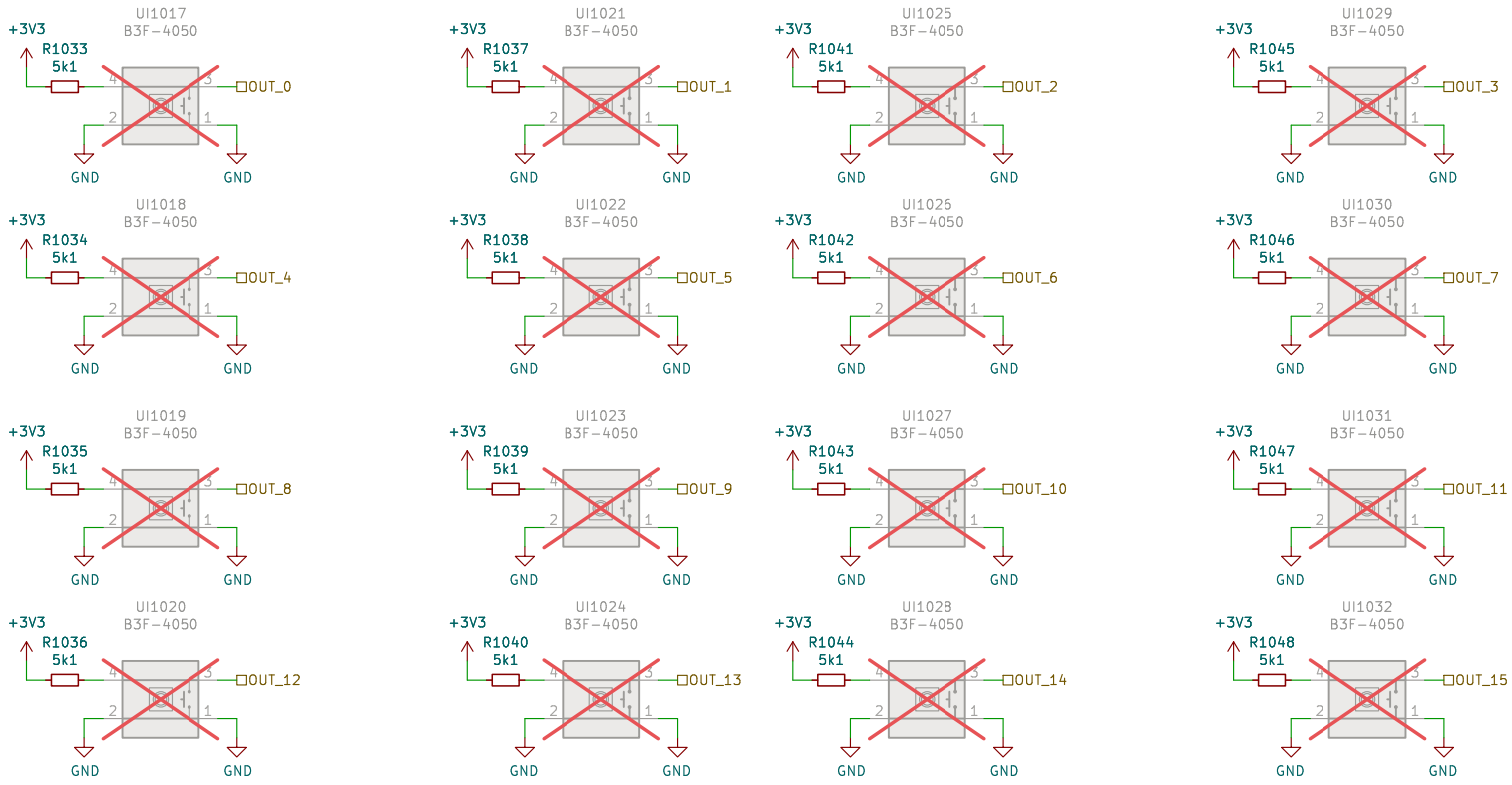


Sheet: /UI_BUTTON/
File: UI_BUTTON.kicad_sch

**Title:**

| Size: A4 | Date: | **Rev:** |
|---|---|---|
| KiCad E.D.A. 8.0.8 | | Id: 3/10 |

# 900

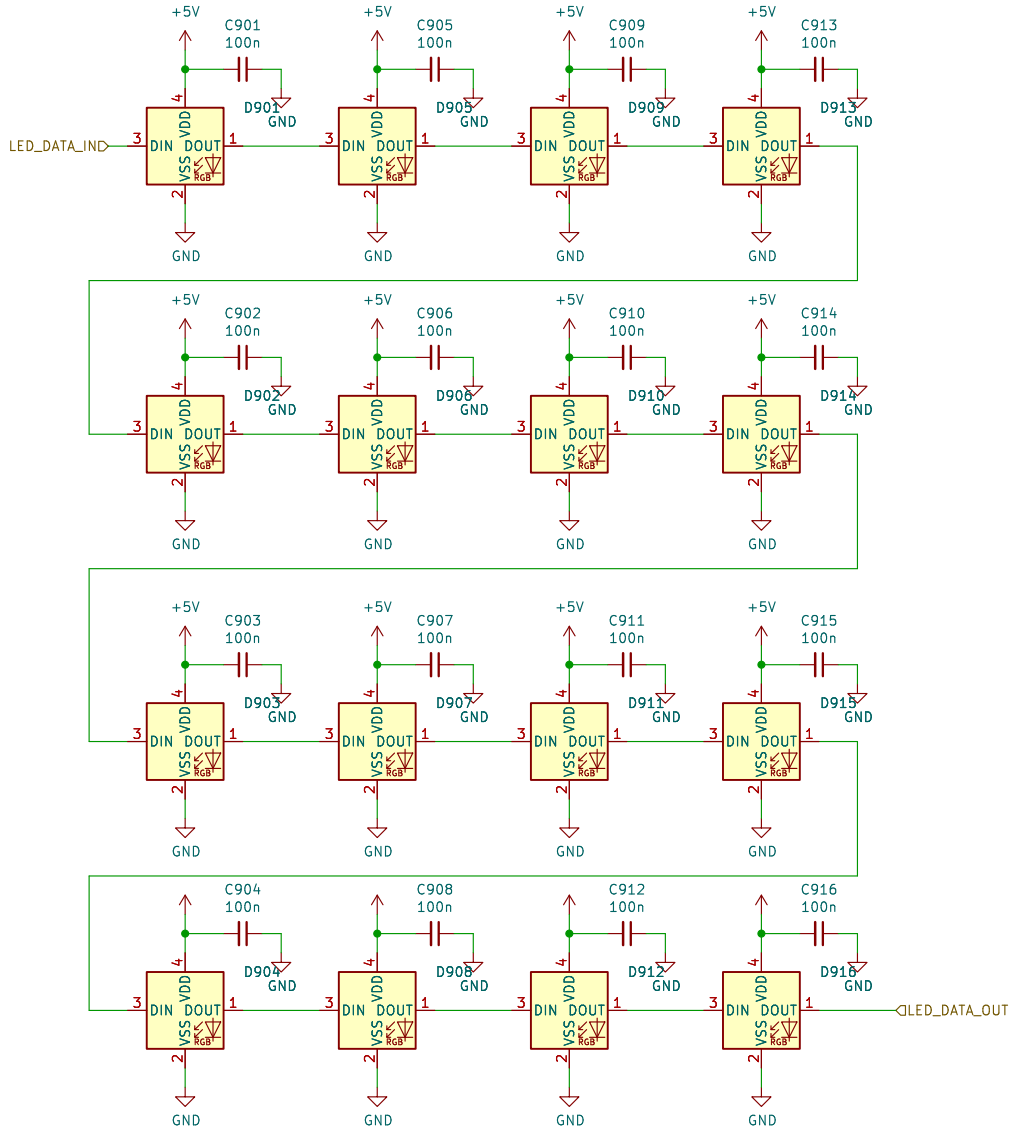


Sheet: /UI_LED/
File: UI_LED.kicad_sch

**Title:**

| Size: A4 | Date: | Rev: |
|---|---|---|
| KiCad E.D.A. 8.0.8 | | Id: 4/10 |

# 1000

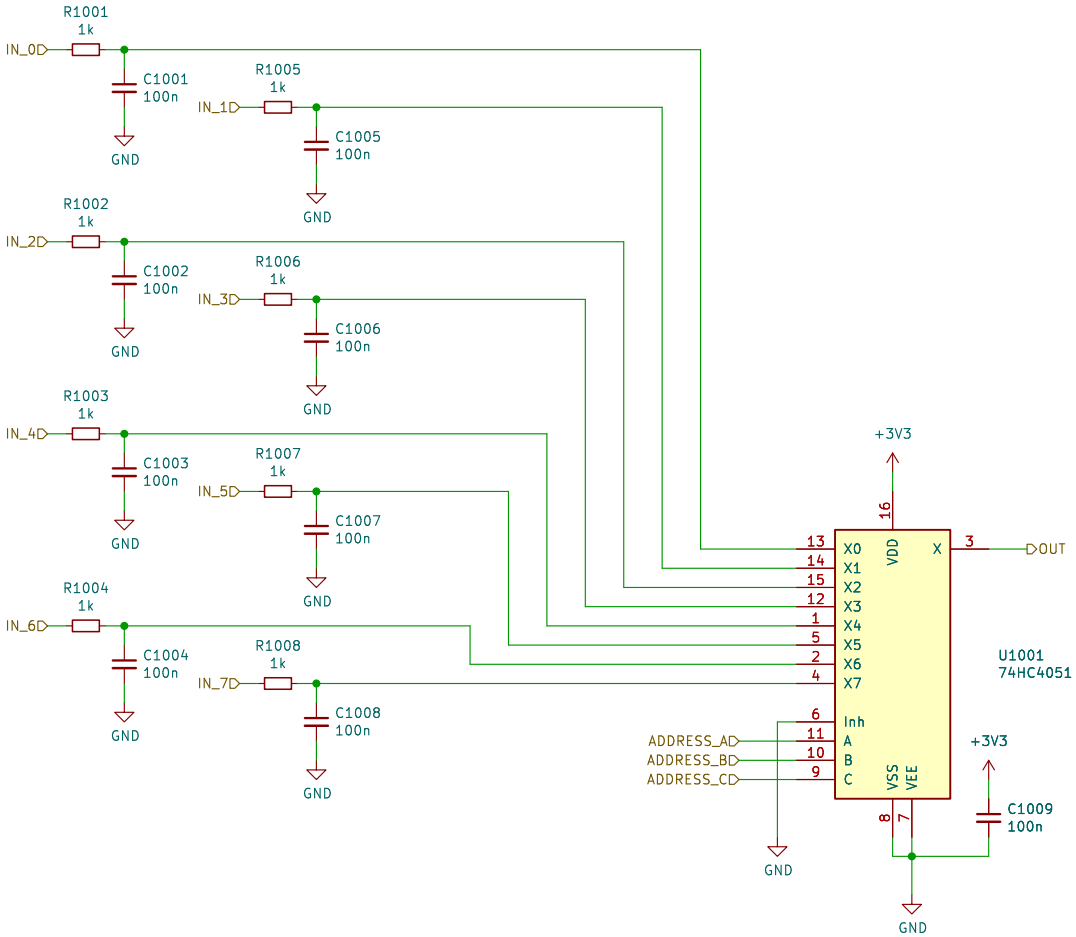


Sheet: /Sheet5D7C8BFD/
File: UI_MUX.kicad_sch

**Title:**

| Size: A4 | Date: | Rev: |
|---|---|---|
| KiCad E.D.A. 8.0.8 | | Id: 5/10 |

# 1000

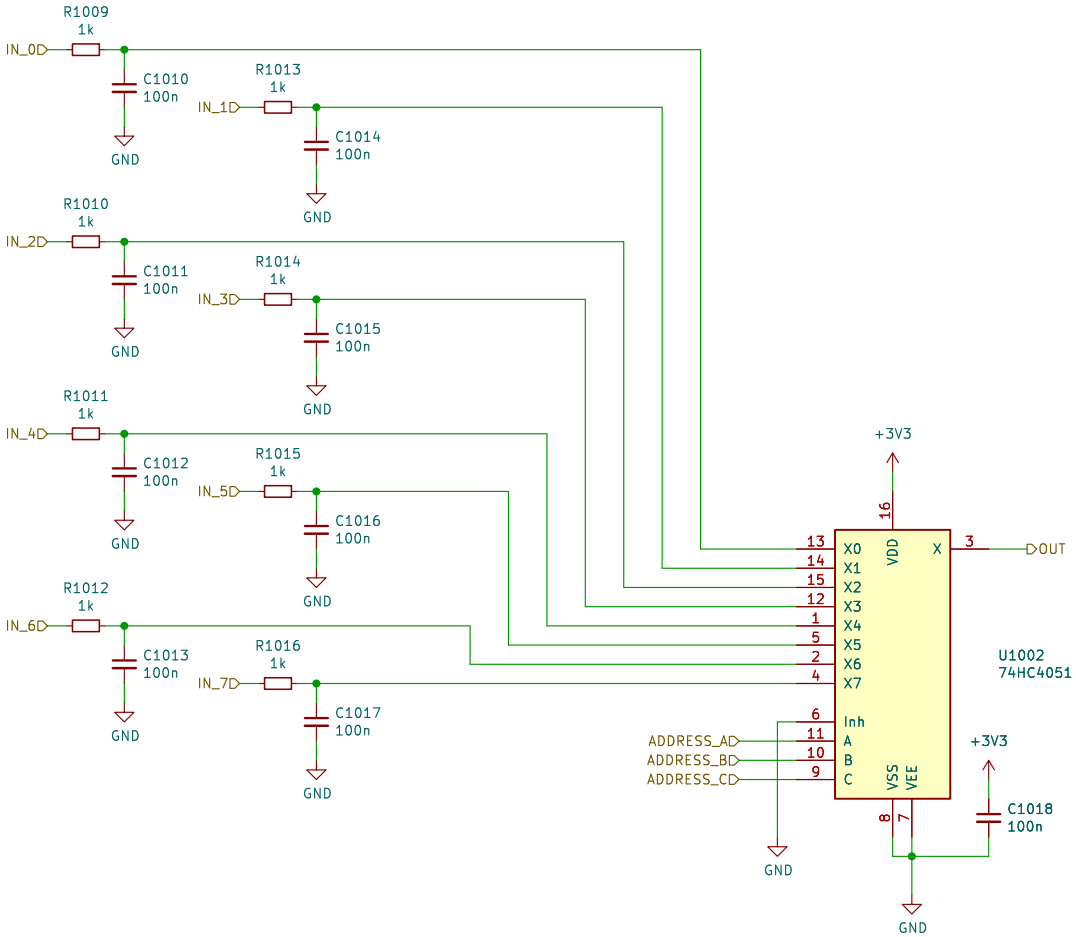


Sheet: /sheet5D8763D6/
File: UI_MUX.kicad_sch

**Title:**

| Size: A4 | Date: | Rev: |
|---|---|---|
| KiCad E.D.A. 8.0.8 | | Id: 6/10 |

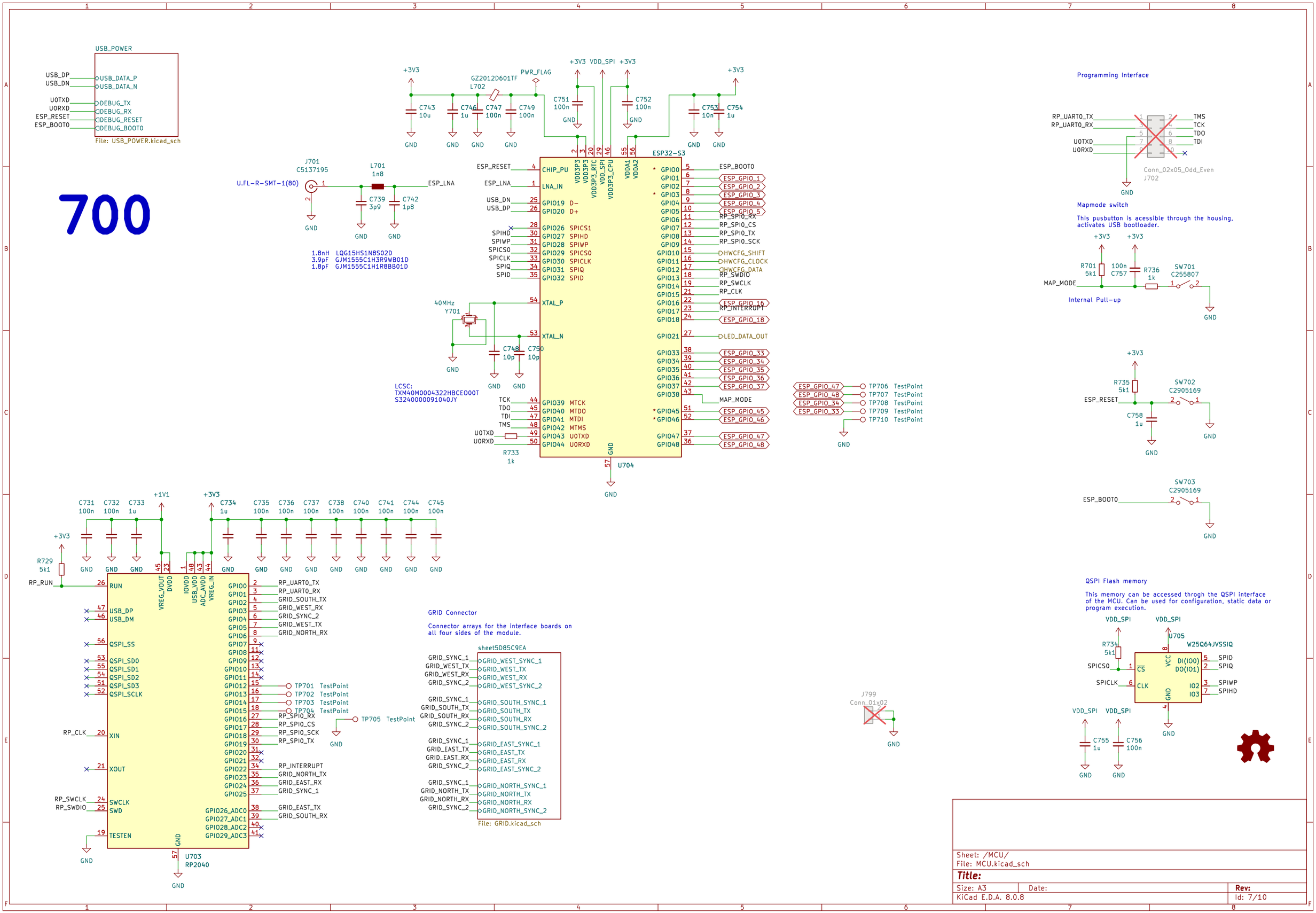
700
USB_POWER
File: USB_POWER.kicad_sch
ESP32-S3
U704
U703
RP2040
J701
C5137195
U.FL-R-SMT-1(80)
L701
1n8
1.8nH LQG15HS1N8S02D
3.9pF GJM1555C1H3R9WB01D
1.8pF GJM1555C1H1R8BB01D
40MHz
Y701
LCSC:
TXM40M0004322HBCE00T
S3240000091040JY
GZ2012D601TF
L702
PWR_FLAG
Programming Interface
Conn_02x05_Odd_Even
J702
Mapmode switch
This pusbutton is acessible through the housing, activates USB bootloader.
Internal Pull-up
SW701
C255807
SW702
C2905169
SW703
C2905169
QSPI Flash memory
This memory can be accessed throgh the QSPI interface of the MCU. Can be used for configuration, static data or program execution.
W25Q64JVSSIQ
U705
GRID Connector
Connector arrays for the interface boards on all four sides of the module.
sheet5D85C9EA
File: GRID.kicad_sch
J799
Conn_01x02
Sheet: /MCU/
File: MCU.kicad_sch
Title:
Size: A3
Date:
Rev:
KiCad E.D.A. 8.0.8
Id: 7/10

GRID Connector
Bi-Directional Data
2x SYNC

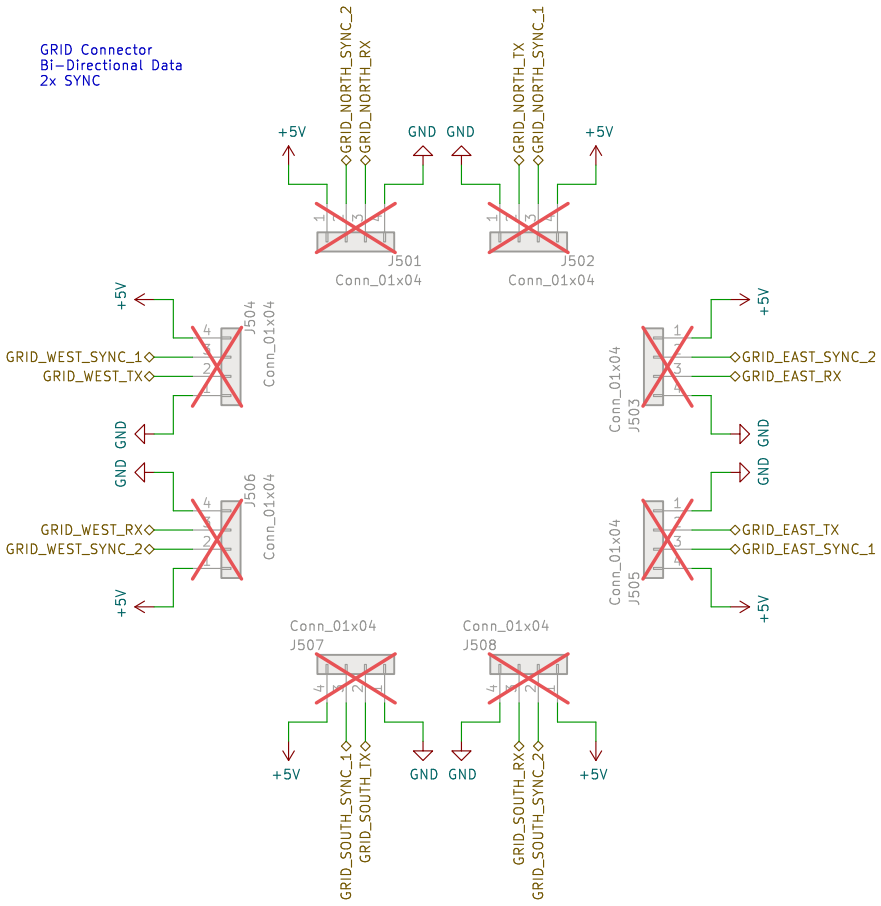


Board Mounting Pattern

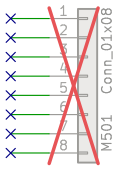


500

Sheet: /MCU/sheet5D85C9EA/
File: GRID.kicad_sch

**Title:**

| Size: A4 | Date: | **Rev:** |
|---|---|---|
| KiCad E.D.A. 8.0.8 | | Id: 8/10 |

# 600

## USB Port

USB C upstream facing port configured for 5V 3A power consumption.

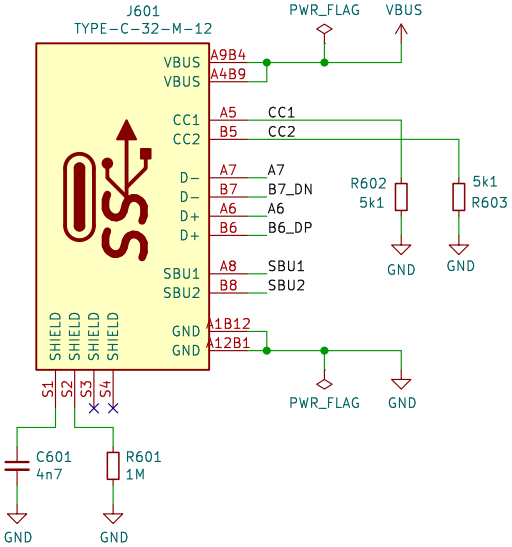


## ESD Prot.

ESP protection for all 8 signals externally accessable via the USB C connector.

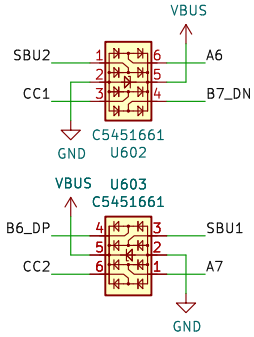


## Debug-Mode Multiplexing

Debug.mode is activated when both CC1 and CC2 are pulled to logic high externally.

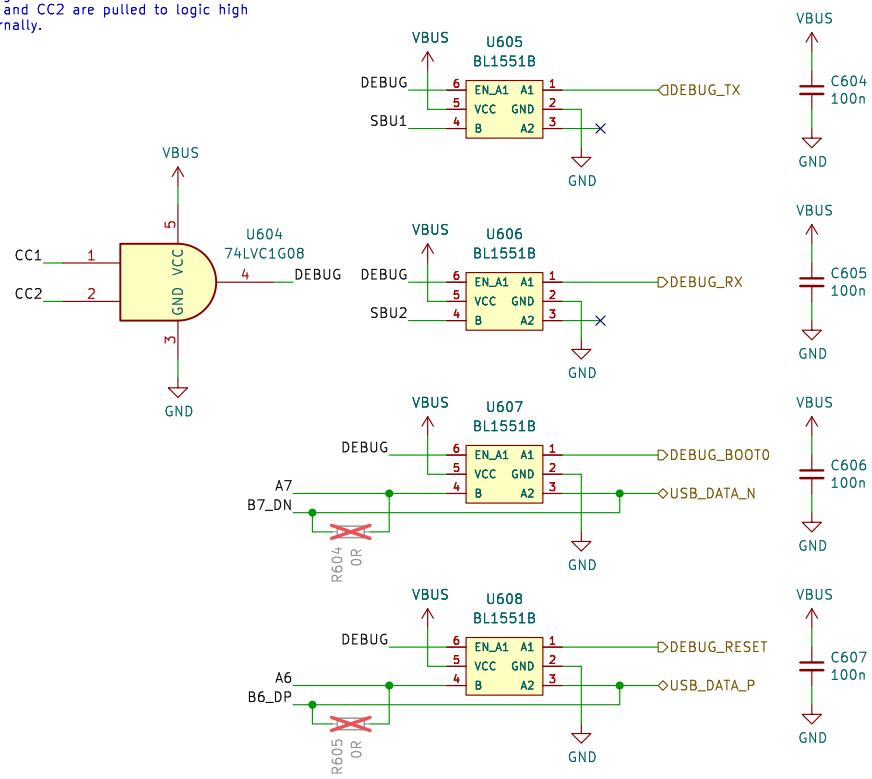


## 3V3 LDO

LDO regulator for generating the +3V3 power rail for the microcontroller and UI.

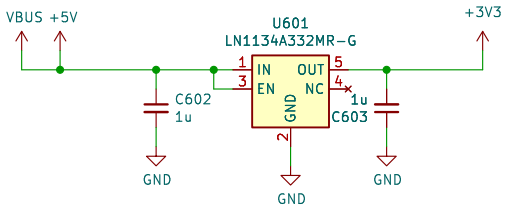


## Testpoints

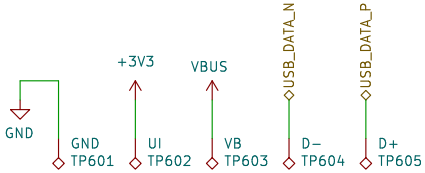


Sheet: /MCU/USB_POWER/
File: USB_POWER.kicad_sch

**Title:**

| Size: A4 | Date: | Rev: |
|---|---|---|
| KiCad E.D.A. 8.0.8 | | Id: 9/10 |

# 800

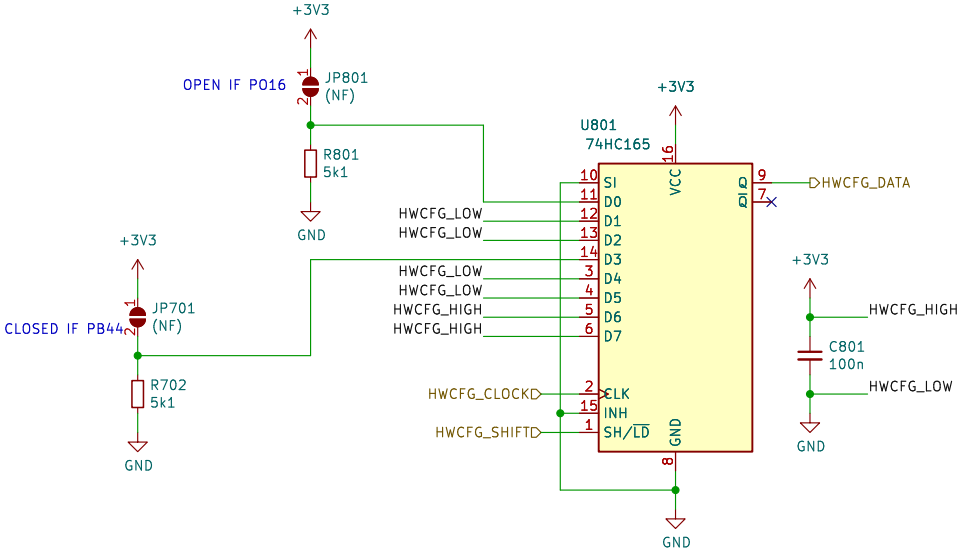


Board Identification

Grid firmware can identify the hardware and the board revision thorugh a 3 wire serial interface using one or more shift register as read only memory. The content of the memory is defined by pulling the inputs high or low through pcb traces or solderable configuration jumpers.

4b'Model + 4b'Revision + nb'Reserved (Multiple shift registers)

D0: MODEL (LSB)
D1: MODEL
D2: MODEL
D3: MODEL (MSB)
D4: REVISION (LSB)
D5: REVISION
D6: REVISION
D7: REVISION (MSB)

Model Codes (D3–D0):

Po16 0000
Bo16 0001
PBF4 0010
EN16 0011
...

Revision Codes (D7–D4):

RevA 0000
RevB 0001
RevC 0010
RevD 0011
...

Sheet: /HWCFG/
File: HWCFG.kicad_sch

**Title:**

| Size: A4 | Date: | **Rev:** |
|---|---|---|
| KiCad E.D.A. 8.0.8 | | Id: 10/10 |