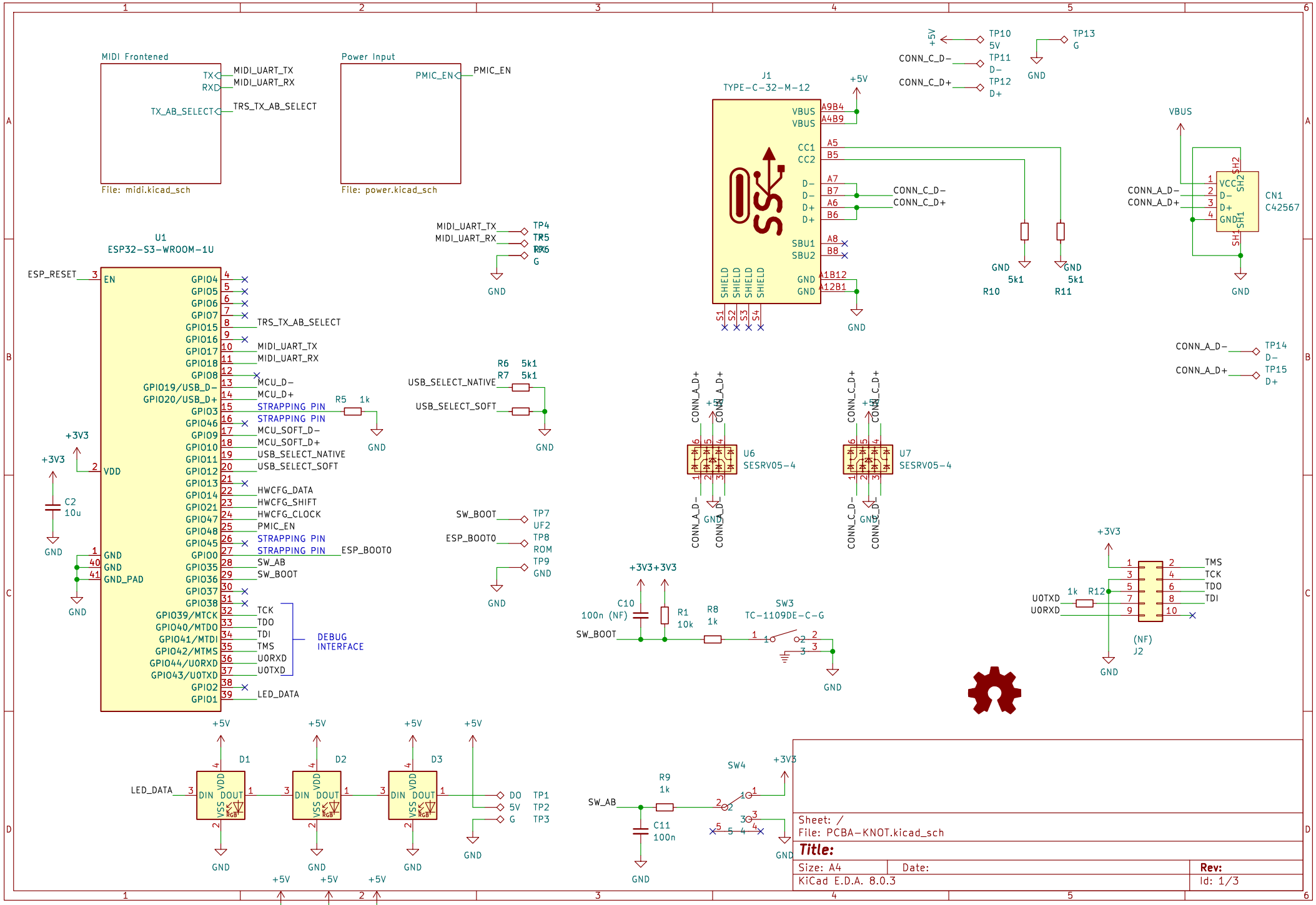
MIDI Frontened
TX
RXD
TX_AB_SELECT
MIDI_UART_TX
MIDI_UART_RX
TRS_TX_AB_SELECT
File: midi.kicad_sch
Power Input
PMIC_EN
File: power.kicad_sch
U1
ESP32-S3-WROOM-1U
ESP_RESET
EN
VDD
GND
GND_PAD
+3V3
C2
10u
GPIO19/USB_D-
GPIO20/USB_D+
MCU_D-
MCU_D+
STRAPPING PIN
MCU_SOFT_D-
MCU_SOFT_D+
USB_SELECT_NATIVE
USB_SELECT_SOFT
HWCFG_DATA
HWCFG_SHIFT
HWCFG_CLOCK
SW_AB
SW_BOOT
ESP_BOOT0
TCK
TDO
TDI
TMS
U0RXD
U0TXD
DEBUG INTERFACE
LED_DATA
R5 1k
R6 5k1
R7 5k1
USB_SELECT_NATIVE
USB_SELECT_SOFT
TP4
TP5
TP6
TP7
UF2
TP8
ROM
TP9
J1
TYPE-C-32-M-12
VBUS
CC1
CC2
D-
D+
SBU1
SBU2
SHIELD
A9B4
A4B9
A5
B5
A7
B7
A6
B6
A8
B8
A1B12
A12B1
S1
S2
S3
S4
CONN_C_D-
CONN_C_D+
R10 5k1
R11 5k1
TP10 5V
TP11 D-
TP12 D+
TP13 G
CN1
C42567
CONN_A_D-
CONN_A_D+
TP14 D-
TP15 D+
U6
SESRV05-4
U7
SESRV05-4
C10
100n (NF)
R1
10k
R8
1k
SW3
TC-1109DE-C-G
R12 1k
U0TXD
U0RXD
J2
(NF)
D1
D2
D3
DIN
DOUT
VDD
VSS
RGB
DO
5V
G
TP1
TP2
TP3
R9
1k
C11
100n
SW4
C3
100n
C4
100n
C5
100n
Sheet: /
File: PCBA-KNOT.kicad_sch
Title:
Size: A4
Date:
Rev:
KiCad E.D.A. 8.0.3
Id: 1/3

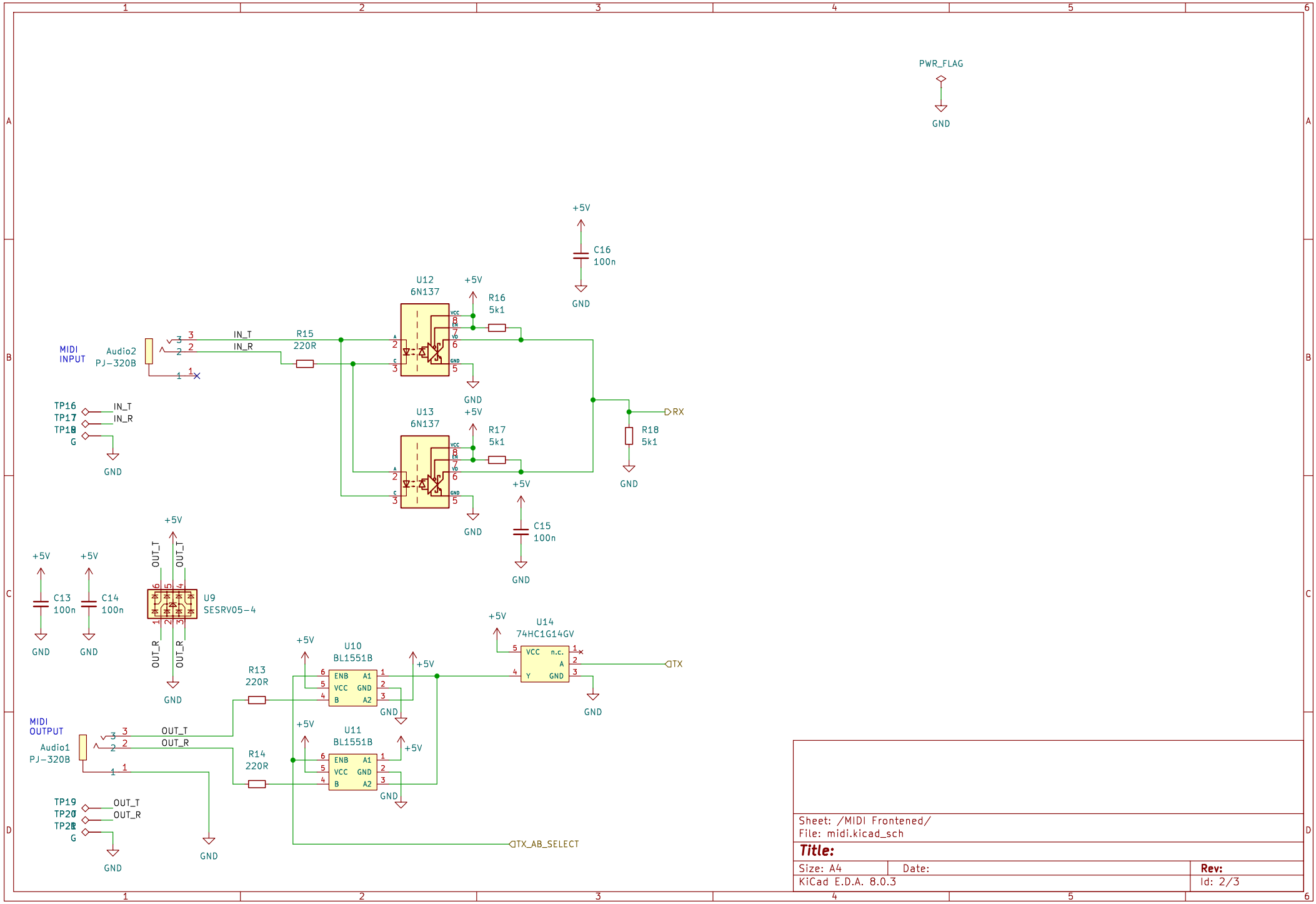

Sheet: /MIDI Frontened/
File: midi.kicad_sch

Title:

Size: A4	Date:	Rev:
KiCad E.D.A. 8.0.3		Id: 2/3

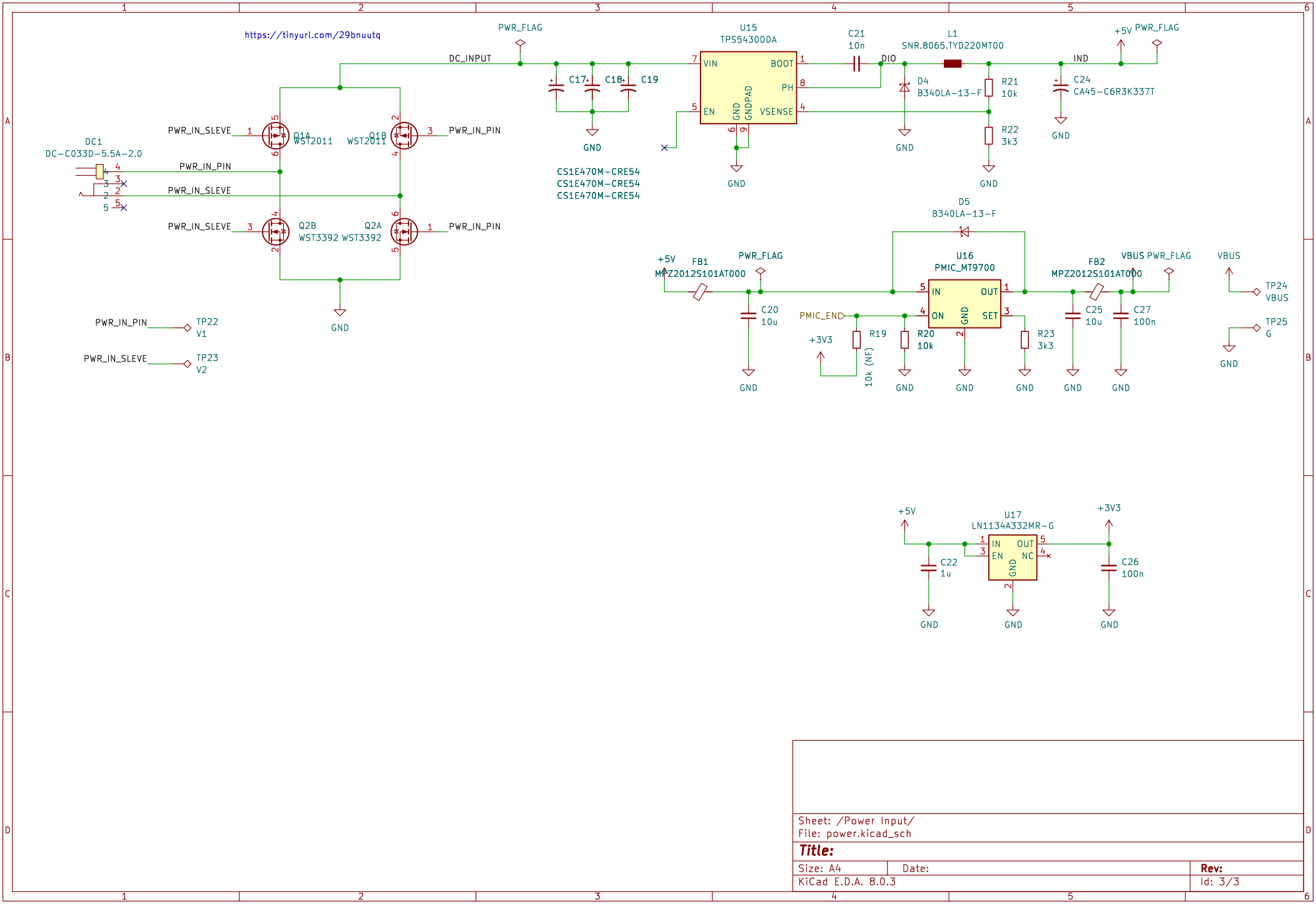

Sheet: /Power Input/
File: power.kicad_sch

Title:

Size: A4	Date:	Rev:
KiCad E.D.A. 8.0.3		Id: 3/3