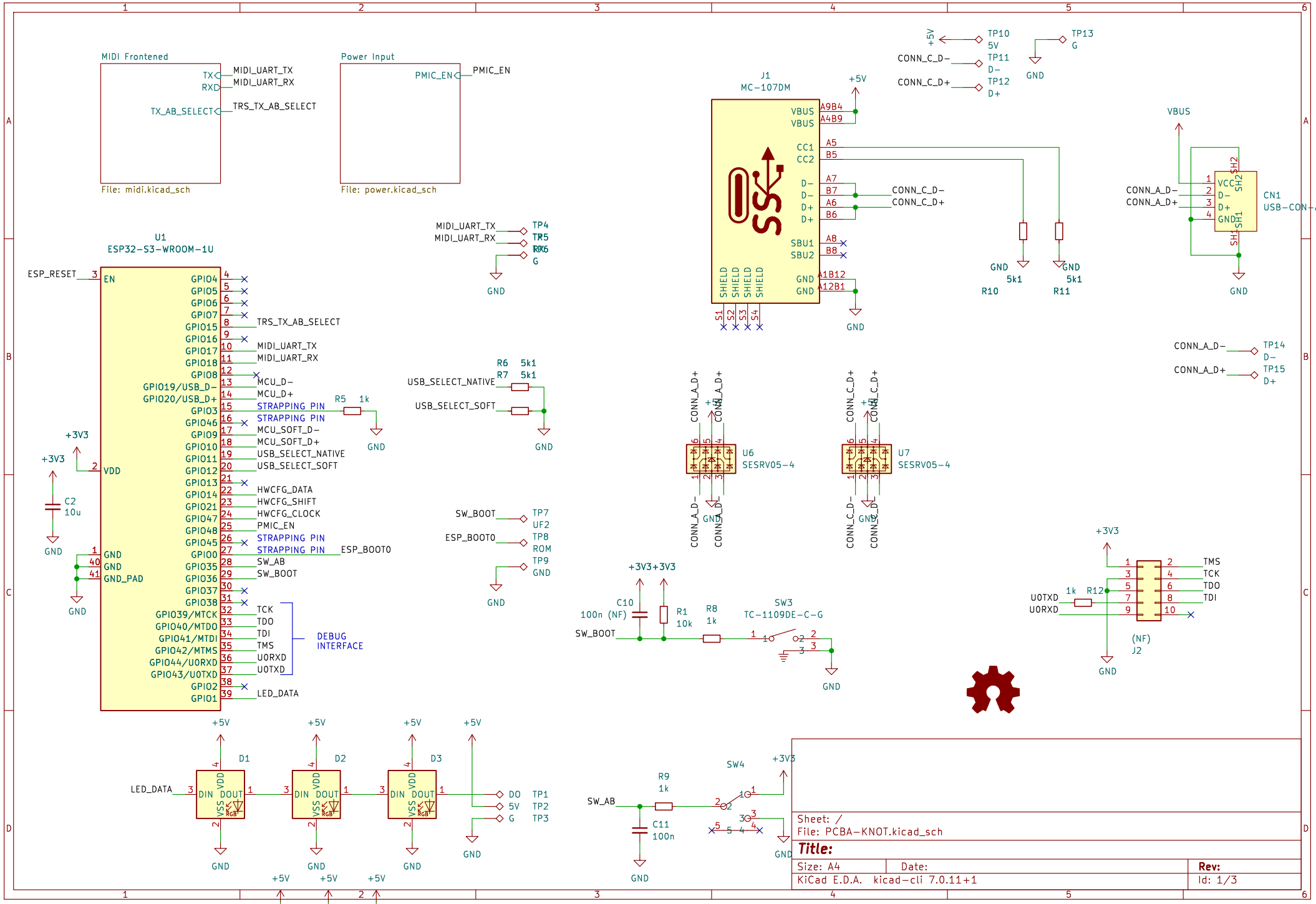
MIDI Frontened
TX
RXD
TX_AB_SELECT
MIDI_UART_TX
MIDI_UART_RX
TRS_TX_AB_SELECT
File: midi.kicad_sch
Power Input
PMIC_EN
PMIC_EN
File: power.kicad_sch
U1
ESP32-S3-WROOM-1U
ESP_RESET
EN
VDD
GND
GND
GND_PAD
+3V3
C2
10u
GPIO19/USB_D-
GPIO20/USB_D+
MCU_D-
MCU_D+
STRAPPING PIN
MCU_SOFT_D-
MCU_SOFT_D+
USB_SELECT_NATIVE
USB_SELECT_SOFT
HWCFG_DATA
HWCFG_SHIFT
HWCFG_CLOCK
PMIC_EN
SW_AB
SW_BOOT
ESP_BOOT0
TCK
TDO
TDI
TMS
U0RXD
U0TXD
DEBUG INTERFACE
LED_DATA
R5 1k
R6 5k1
R7 5k1
USB_SELECT_NATIVE
USB_SELECT_SOFT
MIDI_UART_TX
MIDI_UART_RX
TP4
TP5
TP6
G
GND
SW_BOOT
ESP_BOOT0
TP7
UF2
TP8
ROM
TP9
GND
J1
MC-107DM
VBUS
CC1
CC2
D-
D+
SBU1
SBU2
SHIELD
A9B4
A4B9
A5
B5
A7
B7
A6
B6
A8
B8
A1B12
A12B1
S1
S2
S3
S4
CONN_C_D-
CONN_C_D+
+5V
TP10
5V
TP11
D-
TP12
D+
TP13
G
GND
R10
5k1
R11
5k1
VBUS
CN1
USB-CON-AF-LCP-
CONN_A_D-
CONN_A_D+
VCC
D-
D+
GND
SH1
SH2
TP14
D-
TP15
D+
U6
SESRV05-4
U7
SESRV05-4
+3V3+3V3
C10
100n (NF)
R1
10k
R8
1k
SW3
TC-1109DE-C-G
SW_BOOT
U0TXD
U0RXD
R12
1k
(NF)
J2
TMS
TCK
TDO
TDI
D1
D2
D3
DIN
DOUT
VDD
VSS
RGB
DO
5V
G
TP1
TP2
TP3
SW_AB
R9
1k
C11
100n
SW4
C3
100n
C4
100n
C5
100n
Sheet: /
File: PCBA-KNOT.kicad_sch
Title:
Size: A4
Date:
Rev:
KiCad E.D.A. kicad-cli 7.0.11+1
Id: 1/3

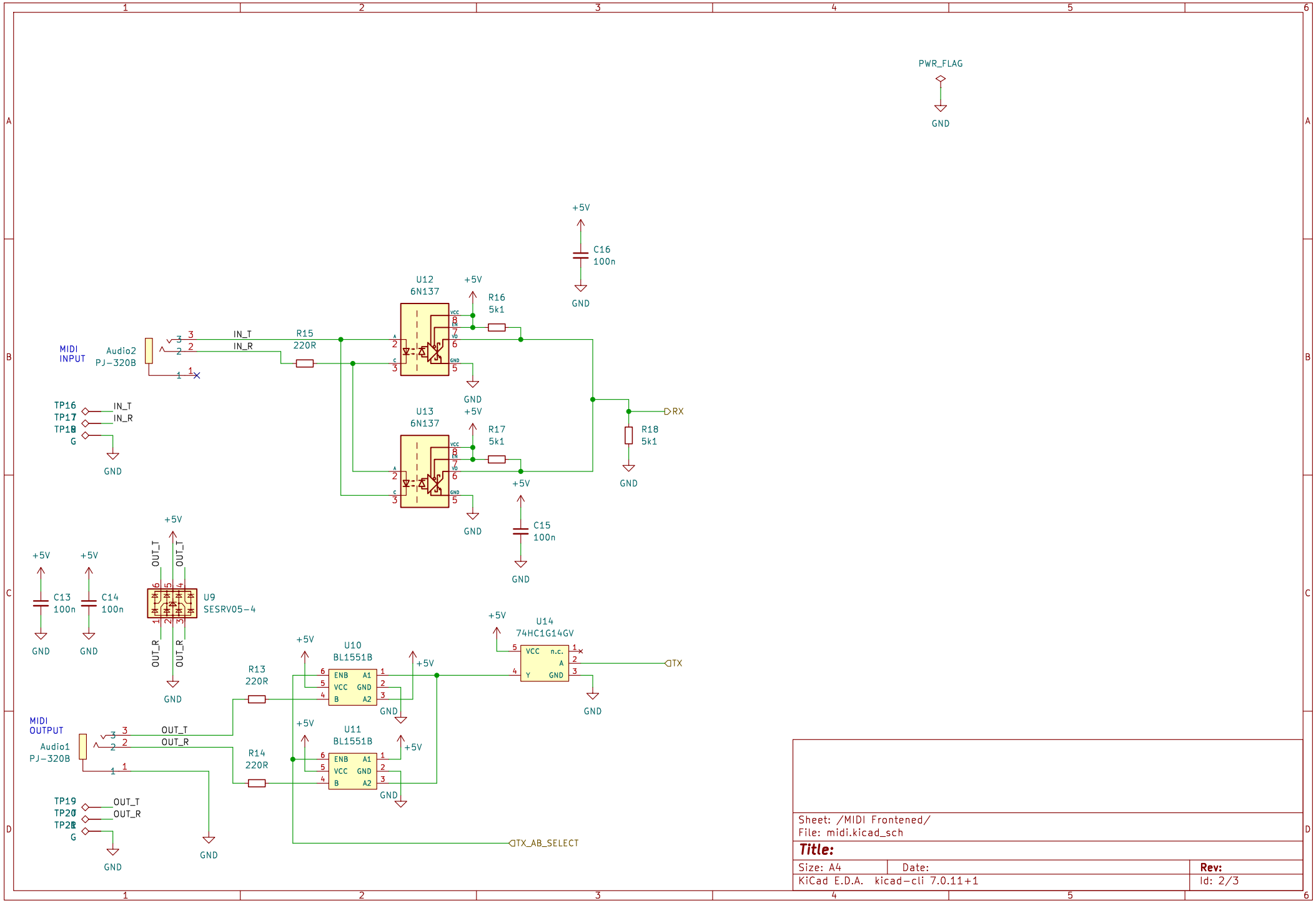

Sheet: /MIDI Frontened/
File: midi.kicad_sch

Title:

Size: A4	Date:	Rev:
KiCad E.D.A. kicad-cli 7.0.11+1		Id: 2/3

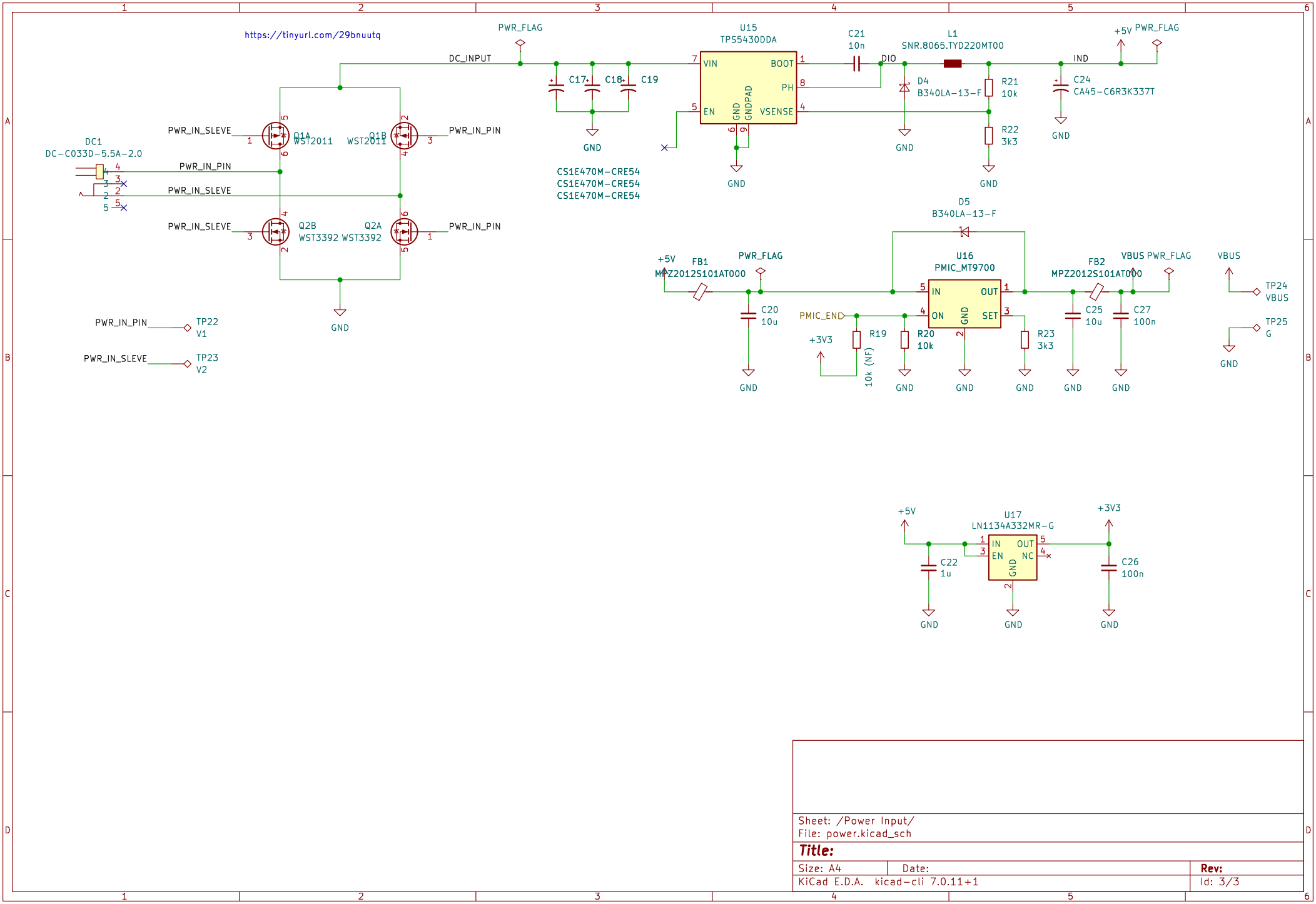

Sheet: /Power Input/
File: power.kicad_sch

Title:

Size: A4	Date:	Rev:
KiCad E.D.A. kicad-cli 7.0.11+1		Id: 3/3