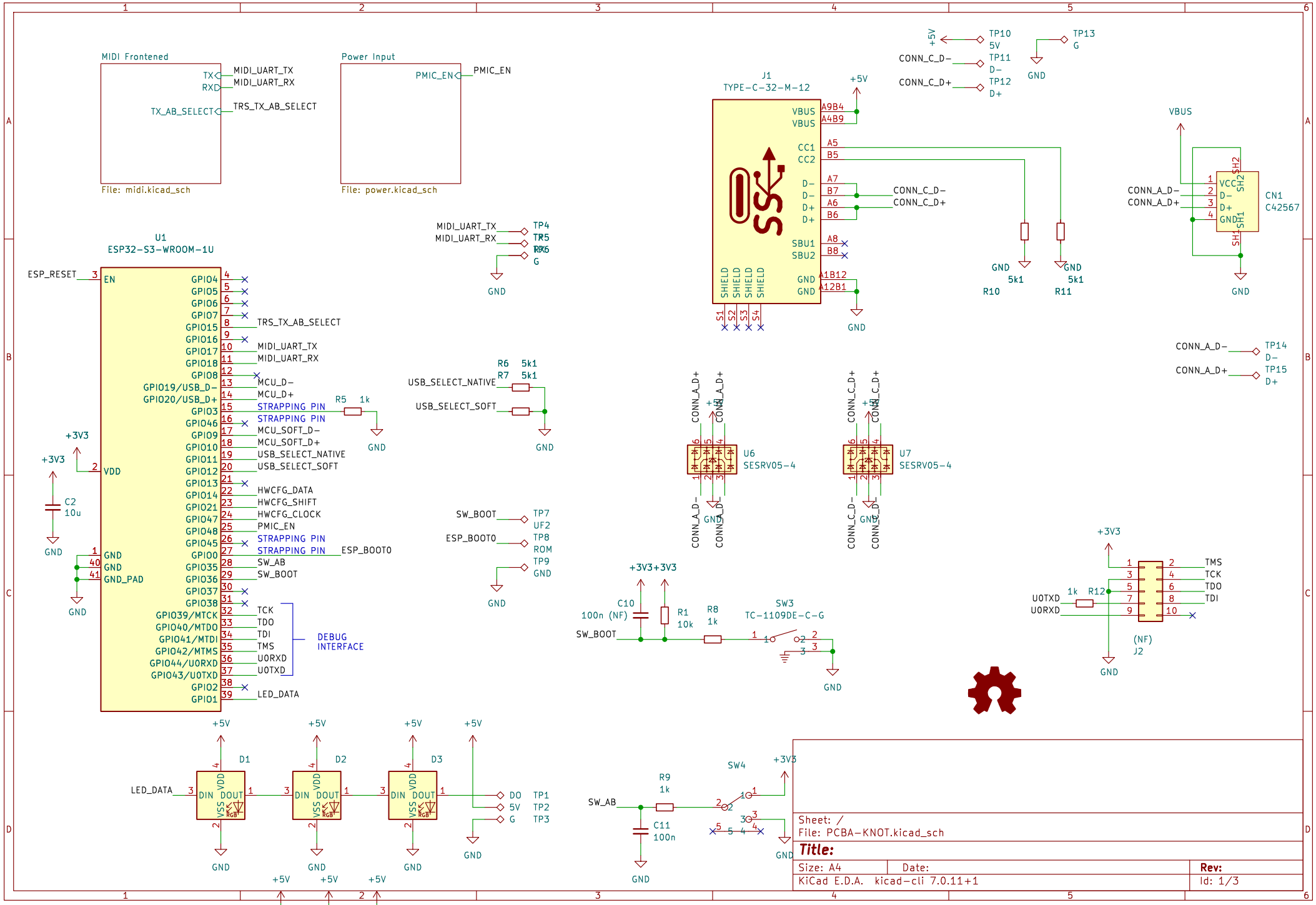

Sheet: /
File: PCBA-KNOT.kicad_sch

Title:

Size: A4	Date:	Rev:
KiCad E.D.A. kicad-cli 7.0.11+1		Id: 1/3

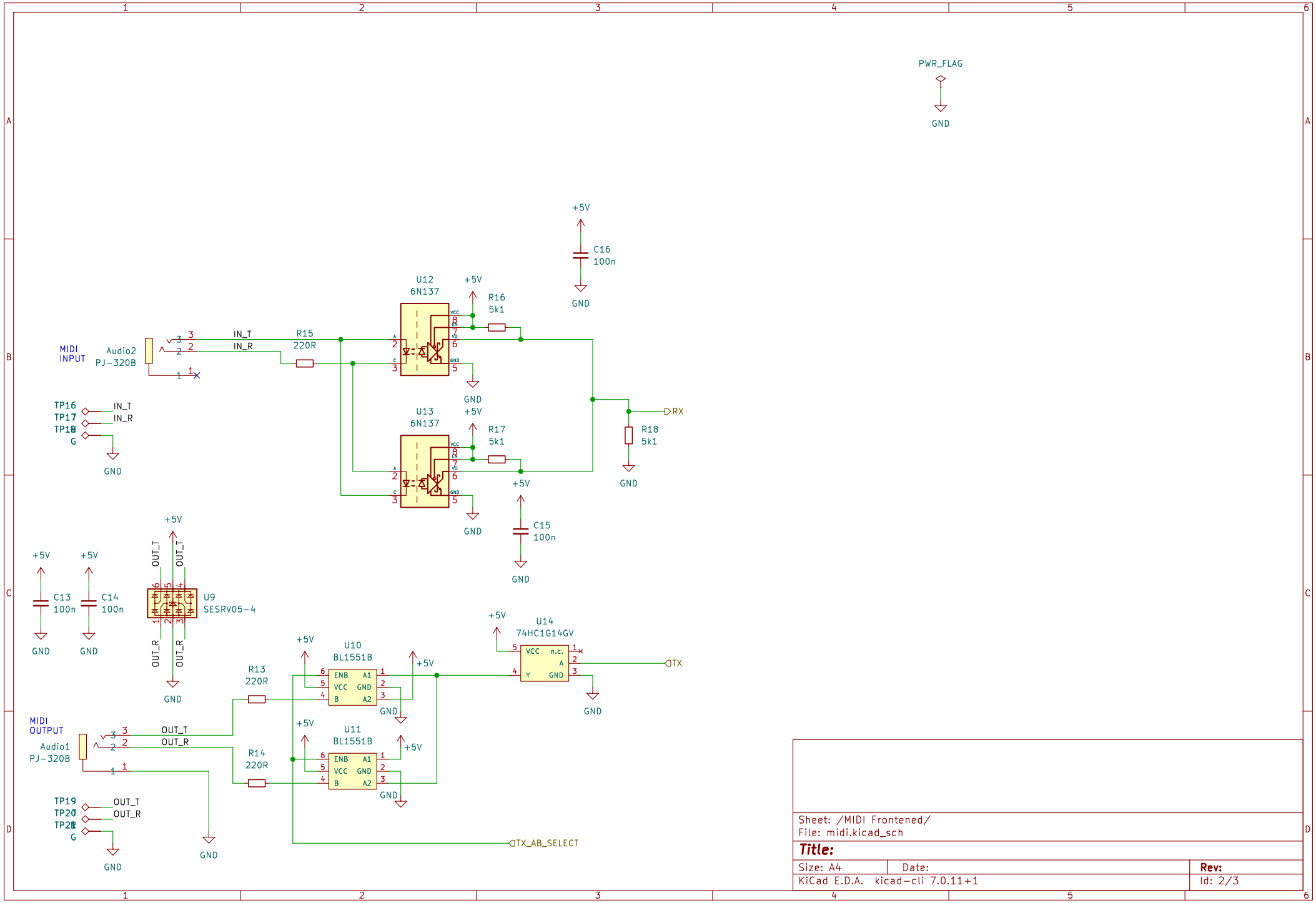

Sheet: /MIDI Frontened/
File: midi.kicad_sch

Title:

Size: A4	Date:	Rev:
KiCad E.D.A. kicad-cli 7.0.11+1		Id: 2/3

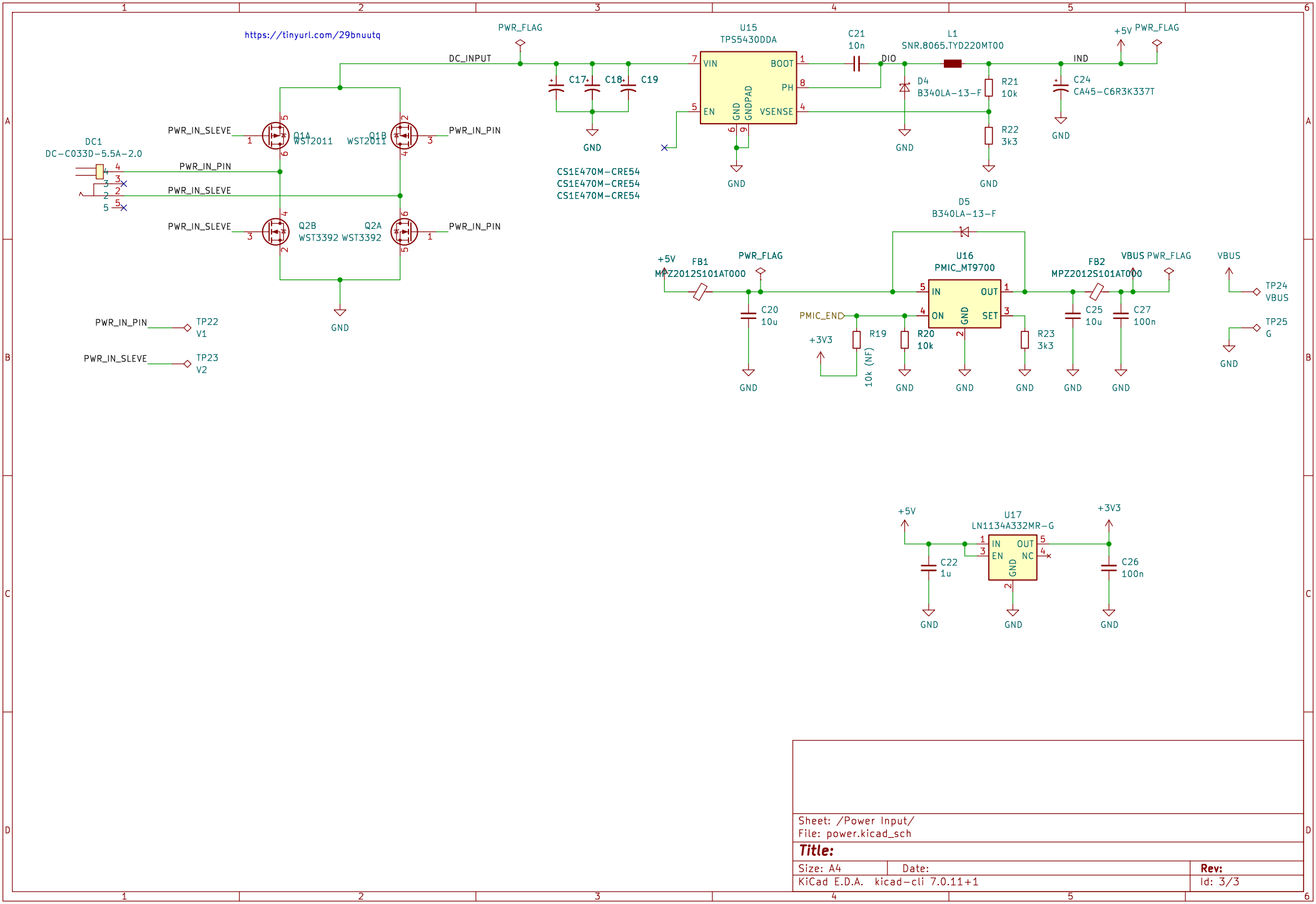

Sheet: /Power Input/
File: power.kicad_sch

Title:

Size: A4	Date:	Rev:
KiCad E.D.A. kicad-cli 7.0.11+1		Id: 3/3