The Open Group Preliminary Standard

O-PAS™ Standard, Version 2.1

Part 1 – Technical Architecture Overview (Informative)

Evaluation Copy

© 2021 The Open Group, All Rights Reserved
Evaluation Copy. Not for redistribution

Copyright © 2021, The Open Group

No part of this publication may be reproduced, stored in a retrieval system, or transmitted, in any form or by any means, electronic, mechanical, photocopying, recording or otherwise, without the prior permission of the copyright owners.

Any use of this publication for commercial purposes is subject to the terms of the Annual Commercial License relating to it. For further information, see www.opengroup.org/legal/licensing.

The Open Group Preliminary Standard

O-PAS™ Standard, Version 2.1: Part 1 – Technical Architecture Overview (Informative)

Document Number: P210-1

Published by The Open Group, May 2021.

Comments relating to the material contained in this document may be submitted to:

The Open Group, Apex Plaza, Forbury Road, Reading, Berkshire, RG1 1AX, United Kingdom

or by electronic mail to:

ogspecs@opengroup.org

Evaluation Copy

© 2021 The Open Group, All Rights Reserved
Evaluation Copy. Not for redistribution

Contents

1 Introduction 1
- 1.1 Objective 1
- 1.2 Overview 1
  - 1.2.1 Quality Attributes 1
  - 1.2.2 Interfaces 2
  - 1.2.3 Architectural Aspects Addressing Specific Quality Attributes 3
- 1.3 Conformance 3
- 1.4 Normative References 4
- 1.5 Terminology 4
- 1.6 Future Directions (Informative) 4

2 Terms and Definitions 5
- 2.1 OPAF Glossary and Abbreviations 5

3 Technical Architecture Concept Overview 6
- 3.1 O-PAS Connectivity Framework (OCF) 7
- 3.2 Distributed Control Node (DCN) 7
- 3.3 Application Types 8
- 3.4 Equipment using the O-PAS Communication Interface (OCI) 9
- 3.5 Business Function Connectivity 10
- 3.6 Internal and External OT Data Centers 10

4 O-PAS Interface Overview 11
- 4.1 Components and Interfaces 11
- 4.2 O-PAS Interfaces 12
  - 4.2.1 Layer-F Import/Export and Download/Upload Formats 14
  - 4.2.2 Configuration Management Interface 15
  - 4.2.3 Application Management Interface 15
  - 4.2.4 Connectivity Framework Interface 15
  - 4.2.5 System Management Interface 15

5 O-PAS Connectivity Framework (OCF) 17

6 System Security 20

7 Planned Platform-Independent Application Interfaces 21
- 7.1 Security Management Interface 24
- 7.2 Security Services Interface 25
- 7.3 Connectivity Framework Software Interface 25
- 7.4 Application Services Interface 25
- 7.5 Configuration Information Interface 25
- 7.6 Platform Services Interface 26
- 7.7 Platform I/O Physical Interface 26
- 7.8 Typical Layer-L Application and Service Functions 27
- 7.9 Platform-Dependent Applications 27

© 2021 The Open Group, All Rights Reserved
Evaluation Copy. Not for redistribution

A Use-Cases 29
A.1 Small Systems 29
A.1.1 DCN Only 29
A.1.2 DCNs and Legacy PLC 29
A.1.3 DCNs and PLC with OCI 30
A.1.4 DCN with Legacy DCS and Field Networks 30
A.2 Medium and Large Size Systems 31
A.2.1 Medium Size Brownfield Example 31
A.2.2 Medium Size Greenfield Example 31
A.2.3 Large Greenfield Example 32
A.3 Integrated Device Example 33
A.4 Integrated Device Example with Layer-F Application Support 34

B Application Types and Layers 36

C Rationale 38
C.1 Interoperability 38
C.2 Modularity 38
C.3 Standard Conformance 38
C.4 Scalability 39
C.5 Portability 39
C.6 Technology Support 39

D Abbreviations 40

Evaluation Copy

© 2021 The Open Group, All Rights Reserved
Evaluation Copy. Not for redistribution

Preface

The Open Group

The Open Group is a global consortium that enables the achievement of business objectives through technology standards. Our diverse membership of more than 800 organizations includes customers, systems and solutions suppliers, tools vendors, integrators, academics, and consultants across multiple industries.

The mission of The Open Group is to drive the creation of Boundaryless Information Flow™ achieved by:

- Working with customers to capture, understand, and address current and emerging requirements, establish policies, and share best practices
- Working with suppliers, consortia, and standards bodies to develop consensus and facilitate interoperability, to evolve and integrate specifications and open source technologies
- Offering a comprehensive set of services to enhance the operational efficiency of consortia
- Developing and operating the industry's premier certification service and encouraging procurement of certified products

Further information on The Open Group is available at www.opengroup.org.

The Open Group publishes a wide range of technical documentation, most of which is focused on development of Standards and Guides, but which also includes white papers, technical studies, certification and testing documentation, and business titles. Full details and a catalog are available at www.opengroup.org/library.

This Document

This document is Part 1 of the O-PAS™ Standard, Version 2.1, a Preliminary Standard of The Open Group. It has been developed and approved by The Open Group.

The O-PAS Standard consists of the following 12 parts (of the anticipated 13 parts):

- O-PAS Part 1 – Technical Architecture Overview (Informative) (this document)
- O-PAS Part 2 – Security
- O-PAS Part 3 – Profiles (Informative)
- O-PAS Part 4 – O-PAS Connectivity Framework (OCF)
- O-PAS Part 5 – System Management
- O-PAS Part 6.1 – Information and Exchange Models: Overview and Interfaces

© 2021 The Open Group, All Rights Reserved
Evaluation Copy. Not for redistribution

- O-PAS Part 6.2 – Information and Exchange Models: Basic Configuration
- O-PAS Part 6.3 – Information and Exchange Models: Alarm and Events Configuration
- O-PAS Part 6.4 – Information and Exchange Models: Function Blocks
- O-PAS Part 6.5 – Information and Exchange Models: IEC 61499
- O-PAS Part 6.6 – Information and Exchange Models: IEC 61131
- O-PAS Part 7 – Distributed Control Platform

The parts listed above are separate documents that can be updated and re-versioned as required as we move forward with the O-PAS Standard.

The O-PAS Standard, Version 2.1 is being published initially as a Preliminary Standard since it addresses an emerging area of technology; therefore, it may change before being published as a full standard of The Open Group. In such a case it will be made as upwards-compatible as possible with the corresponding Preliminary Standard, but complete upwards-compatibility is not guaranteed.

Once this document becomes a full standard, it will supersede the O-PAS Standard, Version 1.0 published in December 2019.

Conventions

A Glossary and Abbreviations reference is available. If a term is not defined in that document then the common English definition, as defined in Merriam-Webster's Collegiate Dictionary, applies.

Evaluation Copy

© 2021 The Open Group, All Rights Reserved
Evaluation Copy. Not for redistribution

Trademarks

ArchiMate, DirecNet, Making Standards Work, Open O logo, Open O and Check Certification logo, Platform 3.0, The Open Group, TOGAF, UNIX, UNIXWARE, and the Open Brand X logo are registered trademarks and Boundaryless Information Flow, Build with Integrity Buy with Confidence, Commercial Aviation Reference Architecture, Dependability Through Assuredness, Digital Practitioner Body of Knowledge, DPBoK, EMMM, FACE, the FACE logo, FHIM Profile Builder, the FHIM logo, FPB, Future Airborne Capability Environment, IT4IT, the IT4IT logo, O-AA, O-DEF, O-HERA, O-PAS, Open Agile Architecture, Open FAIR, Open Footprint, Open Process Automation, Open Subsurface Data Universe, Open Trusted Technology Provider, OSDU, Sensor Integration Simplified, SOSA, and the SOSA logo are trademarks of The Open Group.

Java is a registered trademark of Oracle Corporation and/or its affiliates.

UML is a registered trademark of Object Management Group, Inc. in the United States and/or other countries.

All other brands, company, and product names are used for identification purposes only and may be trademarks that are the sole property of their respective owners.

Evaluation Copy

© 2021 The Open Group, All Rights Reserved
Evaluation Copy. Not for redistribution

Acknowledgements

The Open Group gratefully acknowledges the International Society of Automation for use of the ISA copyrighted ANSI/ISA 62443 series of standards. Visit www.isa.org.

The Open Group gratefully acknowledges the contribution of the following people in the development of this document:

- David Fort – Rockwell Automation (Subcommittee Lead)
- Kirk Hansen – Enterprise Transformation Partners (Subcommittee Lead)
- Kirk Smith – Intel Corporation (Subcommittee Lead)

The Open Group gratefully acknowledges the contribution and leadership of the Co-Chairs of the Open Process Automation™ Forum and Working Groups.

Forum Co-Chairs

- Don Bartusiak – Collaborative Systems Integration, LLC
- Trevor Cusworth – Schneider Electric

Business Working Group Co-Chair

- Luis Duran – ABB Automation GmbH
- Jacco Opmeer – Shell

Enterprise Architecture Work Grouping Co-Chairs

- Dave Emerson – Yokogawa Electric Corporation
- Harirajan Padmanabhan – hpad, Inc.

Technology Working Group Co-Chairs

- David Fort – Rockwell Automation
- Kirk Smith – Intel Corporation

Certification Working Group Co-Chairs

- Ed Agis – Intel Corporation
- Ron Breault – Wind River Systems, Inc.

Evaluation Copy

© 2021 The Open Group, All Rights Reserved
Evaluation Copy. Not for redistribution

Referenced Documents

The following documents are referenced in Part 1 of the O-PAS Standard.

The documents are referred to in the text in such a way that some or all of their content constitutes requirements of this part. For dated references, only the version cited applies. For undated references, the latest version of the referenced document (including any amendments) applies.

(Please note that the links below are good at the time of writing but cannot be guaranteed for the future.)

Normative References

Normative references for Part 1 of the O-PAS Standard are defined in Section 1.4.

Informative References

- ANSI/ISA-62443-1-1:2007: Security for Industrial Automation and Control Systems – Part 1-1: Terminology, Concepts, and Models (adopted by IEC as IEC 62443-1-1)
- IEC 61131-3:2013: Programmable Controllers – Part 3: Programming Languages; refer to: https://webstore.iec.ch/publication/4552
- IEC 61499-1:2012: Function Blocks – Part 1: Architecture; refer to: https://webstore.iec.ch/publication/5506
- IEC 61512-1:1997: Batch Control – Part 1: Models and Terminology (ISA 88.00.01); refer to: https://webstore.iec.ch/publication/5528
- IEC 62264-1:2013: Enterprise-Control System Integration – Part 1: Models and Terminology (ISA 95.00.01); refer to: https://www.iso.org/standard/57308.html
- IEC 62264-3:2016: Enterprise-Control System Integration – Part 3: Activity Models of Manufacturing Operations Management (ISA 95.00.03); refer to: https://www.iso.org/standard/67480.html
- IETF RFC 2119: Key Words for Use in RFCs to Indicate Requirement Levels, March 1997; refer to: https://tools.ietf.org/html/rfc2119
- ISA-TR106.00.01: Procedure Automation for Continuous Process Operations – Models and Terminology; refer to: https://www.isa.org/isa106
- ISO/IEC/IEEE 24765:2017: Systems and Software Engineering – Vocabulary; refer to: www.iso.org/standard/71952.html
- O-PAS Standard, Version 2.1: Part 2 – Security, The Open Group Preliminary Standard (P210-2), May 2021, published by The Open Group; refer to: www.opengroup.org/library/p210

© 2021 The Open Group, All Rights Reserved
Evaluation Copy. Not for redistribution

- O-PAS Standard, Version 2.1: Part 4 – O-PAS Connectivity Framework (OCF), The Open Group Preliminary Standard (P210-4), May 2021, published by The Open Group; refer to: www.opengroup.org/library/p210
- O-PAS Standard, Version 2.1: Part 5 – System Management, The Open Group Preliminary Standard (P210-5), May 2021, published by The Open Group; refer to: www.opengroup.org/library/p210
- O-PAS Standard, Version 2.1: Part 6.1 – Information and Exchange Models: Overview and Interfaces, The Open Group Preliminary Standard (P210-6a), May 2021, published by The Open Group; refer to: www.opengroup.org/library/p210
- O-PAS Standard, Version 2.1: Part 6.2 – Information and Exchange Models: Basic Configuration, The Open Group Preliminary Standard (P210-6b), May 2021, published by The Open Group; refer to: www.opengroup.org/library/p210
- O-PAS Standard, Version 2.1: Part 7 – Distributed Control Platform, The Open Group Preliminary Standard (P210-7), May 2021, published by The Open Group; refer to: www.opengroup.org/library/p210
- The Industrial Internet of Things Volume G5: Connectivity Framework (IIC:PUB:G5:V1.0:PB:20170228), Industrial Internet Consortium; refer to: https://www.iiconsortium.org/IICF.htm

Evaluation Copy

© 2021 The Open Group, All Rights Reserved
Evaluation Copy. Not for redistribution

1 Introduction

1.1 Objective

The O-PAS Standard defines interfaces for open and interoperable process automation products. This document lays out the overall Technical Architecture of a process automation system containing O-PAS conformant components that interact through defined interfaces. (Conformant components are explained in Section 1.3.) The O-PAS Standard is developed by the Open Process Automation™ Forum (OPAF), a Forum of The Open Group.

The objective of the Technical Architecture is to meet the requirements of a distributed and secure process automation system using an open and interoperable architecture.

1.2 Overview

The Technical Architecture allows for construction of safe, reliable, secure process automation systems that are scalable from very small to very large, which do not require system shutdown to perform updates and extensions, and which can be applied to existing plants and to new construction. The Technical Architecture has been defined to maximize the safety, resilience, reliability, maintainability, and security of a process automation system.

1.2.1 Quality Attributes

The O-PAS Technical Architecture facilitates the key quality attributes selected by OPAF. The foundational quality attributes are **safety**, **reliability**, and **securability**.

Going beyond those, a central goal of OPAF is to allow development of process automation systems with components from multiple vendors, without requiring custom integration. This will demand a high level of the following quality attributes:

- Interchangeability: the ability of a component to be replaced by another component without modification

  Note that this requires the interfaces between components to be clearly defined.

- Interoperability: the ability of two or more systems or components to exchange information and to use the information that has been exchanged

  Note that this requires the information flow across an interface to be defined (see previous bullet) as a critical part of the interface's definition.

- Portability: the ease with which a system or component can be transferred from one hardware or software environment to another

- Modularity: the degree to which a system or computer program is composed of discrete components such that a change to one component has minimal impact on other components

© 2021 The Open Group, All Rights Reserved
Evaluation Copy. Not for redistribution

For reference, here are some other important quality attributes, listed in alphabetical order:

Affordability	Flexibility	Scalability
Availability	Maintainability	Standard Conformance
Compatibility	Manageability	Testability
Configurability	Resilience	Traceability
Discoverability	Reusability	Usability
Evolvability		

1.2.2 Interfaces

Section 1.2.1 lists four key quality attributes: interchangeability, interoperability, portability, and modularity. The O-PAS Standard defines the interfaces critical to achieving those quality attributes.

An interface is a place where systems or components meet and act on or communicate with each other. The interaction can be between software, computer hardware, peripheral devices, humans, and combinations of these.

The key principle enabling interchangeability is to **separate the interface from the implementation**. The interaction between two or more components **is** specified by the O-PAS Standard. How each component provides the functionality required by the interface is *not* – that is left up to the designer.

Here are the types of interfaces that the O-PAS Standard identifies most frequently:

- Software interface (in the following descriptions, A, B, M, N, X, and Y are software components):
  - — Subroutine call: A calls an entry point in B; the components then exchange data that represents information and/or instructions

    The most common example of this approach is called an Application Program Interface (API), where the "API" gives the name of the entry point being called.
  - — File: M writes a file; the file is then read, and possibly updated, by N
  - — Stream: X and Y interact by passing data over a communication channel
- Physical interface: a device's physical port or connection, linking to a physical communication channel

Note: The O-PAS Standard also makes frequent reference to the Human-Machine Interface (HMI), which is the user interface or dashboard that is presented to the operator. But because it is not an interface between system components, specifying the HMI in detail is *not* in the scope of the O-PAS Standard.

© 2021 The Open Group, All Rights Reserved
Evaluation Copy. Not for redistribution

1.2.3 Architectural Aspects Addressing Specific Quality Attributes

The following table lists some aspects of the Technical Architecture that are designed to address particular quality attributes.

Quality Attributes	Technical Architecture Design Aspect(s)
Safety and Resilience	Redundancy can be implemented on an I/O point-by-I/O point basis, reducing the scope of failure to a single loop and providing the capability for automatic transfer of control logic.
Resiliency	Provides the environment for m-to-n redundancy, where a node may assume the role of a failed node and either run its applications, use alternate I/O, or simulate the failed I/O.
Reliability and Maintainability	A system can be implemented to be incrementally upgraded and enhanced, without system shutdowns and without turning off power to the rest of the system, except for components being repaired or replaced. Allows incremental upgrades by replacement of components with the same or additional functionality, without system redesign. Provides the ability to move applications across control nodes without modification, allowing recovery from control node failure.
Security	Security is designed into all aspects to allow low lifetime support efforts to maintain updates and patches, and to allow secure communication between components and other systems.
Interoperability	Defined through interfaces and information models, using existing standards where feasible and The Open Group standards, extensions, or profiles where needed.
Integrability	Control strategies on multiple levels can be easily integrated, without extensive integration services.
Scalability	The end user is only required to buy the needed capability and capacity and can easily add or remove capabilities or capacity later.
Existing Systems	Replacement of existing instruments or wiring is not required.

1.3 Conformance

Part 1 of the O-PAS Standard is informative, and no conformance requirements are defined in this part. Normative requirements and conformance criteria are defined in the other parts of the O-PAS Standard.

In the O-PAS standard, a *Component* is a defined part (either a hardware part or a software part) of a process automation system. A *Conformant Component* is a Component that meets all the stated conformance requirements for a component of its type.

© 2021 The Open Group, All Rights Reserved
Evaluation Copy. Not for redistribution

Part 1 is intended to provide a general overview of a system that contains O-PAS conformant components and to describe the general functionality of the interfaces between them. The interface specifications are detailed in the other parts of the O-PAS Standard.

1.4 Normative References

Part 1 of the O-PAS Standard is informative, so there are no normative references.

1.5 Terminology

The key words “shall”, “shall not”, and “should” are used in the normative parts of the O-PAS Standard as defined below. These definitions are taken from IETF RFC 2119.

Shall	Definition is an absolute requirement of the specification.
Shall not	Definition is an absolute prohibition of the specification.
Should	There may exist valid reasons in particular circumstances to ignore a particular item, but the full implications must be understood and carefully weighed before choosing a different course.

1.6 Future Directions (Informative)

A future version of the O-PAS Standard will address additional functionality. See Chapter 7 for details on planned future extensions. At that time, Part 1 and its contents will be revised and updated accordingly.

Evaluation Copy

© 2021 The Open Group, All Rights Reserved
Evaluation Copy. Not for redistribution

2 Terms and Definitions

For the purposes of the O-PAS Standard, the following terms and definitions apply. Merriam-Webster's Collegiate Dictionary should be referenced for terms not defined in this chapter. The OPAF Glossary and Abbreviations should be referenced for additional terms not defined in this chapter.

2.1 OPAF Glossary and Abbreviations

For the OPAF Glossary and Abbreviations, see the definitions at: www.opengroup.org/open-process-automation-forum/glossary.

Evaluation Copy

© 2021 The Open Group, All Rights Reserved
Evaluation Copy. Not for redistribution

3 Technical Architecture Concept Overview

Figure 1 is a concept diagram that illustrates a process automation system that is a collection of O-PAS conformant components. A conformant component is any device or software that is conformant to a profile defined in the O-PAS Standard. The primary conformant components described in this document are Distributed Control Nodes (DCNs) connected via the O-PAS Connectivity Framework (OCF).

Using the OPC UA, the OCF provides information representation and transport mechanisms for determinism and quality of service as required for data exchanges to support distributed control logic execution. (For an introduction to the OPC UA, please see the Introduction to the OPC UA appendix in O-PAS Part 4 – O-PAS Connectivity Framework (OCF).) An O-PAS system is a collection of O-PAS conformant components all exchanging information using the OCF.

A DCN resides on a physical platform (see O-PAS Part 7 – Distributed Control Platform) or a virtualized platform conforming to the O-PAS profiles, and optionally contains applications. A component which does not have a conforming physical platform (for example, Distributed Control System (DCS), Programmable Logic Controller (PLC), analyzer, etc.) may also conform to O-PAS profiles and communicate using the OCF Communication Interface (OCI).

An application is a set of one or more programs, supported by required data and customized by configuration information, performing a group of related functions Connectivity to non-conformant O-PAS devices is provided through DCNs performing gateway functions to make the non-conformant O-PAS device's information accessible through the OCF.

Each component in the system may execute all or part of the overall control and operations strategies, based on the capabilities and capacities of the component.

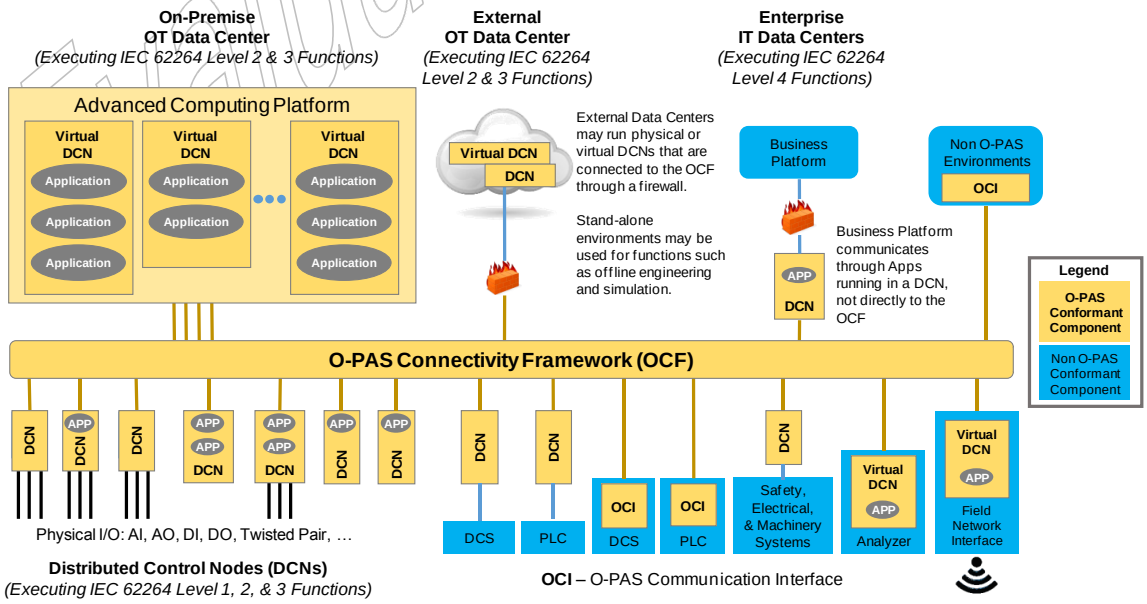

Figure 1: Concept Diagram of a Process Automation System of O-PAS Conformant Components

© 2021 The Open Group, All Rights Reserved
Evaluation Copy. Not for redistribution

3.1 O-PAS Connectivity Framework (OCF)

The O-PAS Connectivity Framework (OCF) is a secure and interoperable communication framework, defined in O-PAS Part 4.

While the OCF is shown as a single network in Figure 1, actual implementations may consist of segmented networks, VLANs, firewalls, and other mechanisms to ensure security, performance, and quality of service.

3.2 Distributed Control Node (DCN)

A Distributed Control Node (DCN) is a type of conformant component that connects to the OCF. There are two aspects to a DCN that are intermingled within this version of the O-PAS Standard:

1. The network view of the device – the DCN term is used to mean any device that implements the network interfaces required of a DCN. This might be rack-mounted general-purpose computers – Advanced Computing Platforms (ACPs) – or DIN[1] rail-mountable industrial controllers or proprietary equipment that expose data in an O-PAS conformant way. In this definition, if a device implements the network interfaces such as the O-PAS OPC UA Information Model of O-PAS Part 6 – Information and Exchange Models and the System Management Interface defined in O-PAS Part 5 – System Management, it is considered a DCN.
2. The physical characteristics of the device – when discussing physical platforms, a DCN is a small rugged device that can be mounted in the field and perform some autonomous control locally. In this case, contrast with ACP, analyzer, and other types of equipment which are sometimes considered "DCN" according to aspect #1 immediately above.

DCN types include the following, possibly overlapping types:

- DCNs with physical I/O
- DCNs without physical I/O
- Virtual DCNs which execute DCN functionality within a computing environment
- ACPs that implement the DCN network view

  An ACP is a real-time high availability computing platform with scalable computing resources (memory, disk, CPU cores) providing the determinism, low latency, and reliability needed to handle applications or services that require more resources than are typically available on a DCN.

  ACPs may also be used for applications which cannot be easily or efficiently distributed; for example, due to compute requirements and limited capacity of DCNs or intolerance of node-to-node communication delays.

  ACPs may provide abstractions such as Virtual Machines (VMs) in which DCN functions are performed.

  The O-PAS Standard permits an ACP to contain additional functionality not defined in the standard, but no claims of portability or platform independence are made regarding such additional functions.

[1] A DIN is a type of rail for mounting industrial control equipment in equipment racks.

© 2021 The Open Group, All Rights Reserved
Evaluation Copy. Not for redistribution

- Gateways

  A DCN which provides OCF interoperability to a software component, device, or system, which is not natively O-PAS conformant.

  For example, a DCN acting as a gateway may be connected to a legacy DCS, legacy PLC, smart device, Highway Addressable Remote Transducer (HART) device, Foundation Fieldbus device, or a network of such devices.

Equipment, such as DCSs, PLCs, analyzers, etc., containing an OCI can participate in O-PAS information exchange in the same way as other DCNs. Even though they have different physical form factors and capabilities, they are visible through the OCF like other DCNs, and provide and consume signals with other nodes on the OCF. Note the OCI explicitly shown in the PLC and DCS in Figure 1 is also present in the other DCNs, and is shown explicitly here to indicate that by adding the OCI, these products can participate in the OCF. Each DCN can be configured based on the role it performs in the overall automation and operations strategies. This allows replacement of a DCN to be a simple maintenance action.

3.3 Application Types

An application is a set of one or more programs, supported by required data and customized by configuration information, performing a group of related functions. Its three parts can be represented graphically as illustrated in Figure 2.

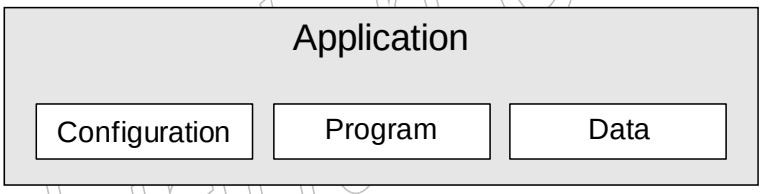

Figure 2: Parts of an Application

The three contained boxes are:

- Configuration information: the parameters and initial settings for the program
- Program code: the instructions to be executed
- Data store: bytes on which the program code operates – designated parts may persist between executions

There are different types of applications defined in this document using a “FILO” model of describing layers of software, as shown in Figure 3.

The FILO model is used to uniquely define the meaning of the term “application” that can have different meanings to different users. An application is a combination of configuration information, a program, and data used by the program. The labels “F”, “I”, “L”, and “O” are in alphabetic order, reflecting their relative order in the layered FILO model of applications.[2]

[2] FILO is not intended to be a word or acronym; however, the word “filo” is used because it is also a type of layered pastry dough and reinforces the layered model of applications and services.

© 2021 The Open Group, All Rights Reserved
Evaluation Copy. Not for redistribution

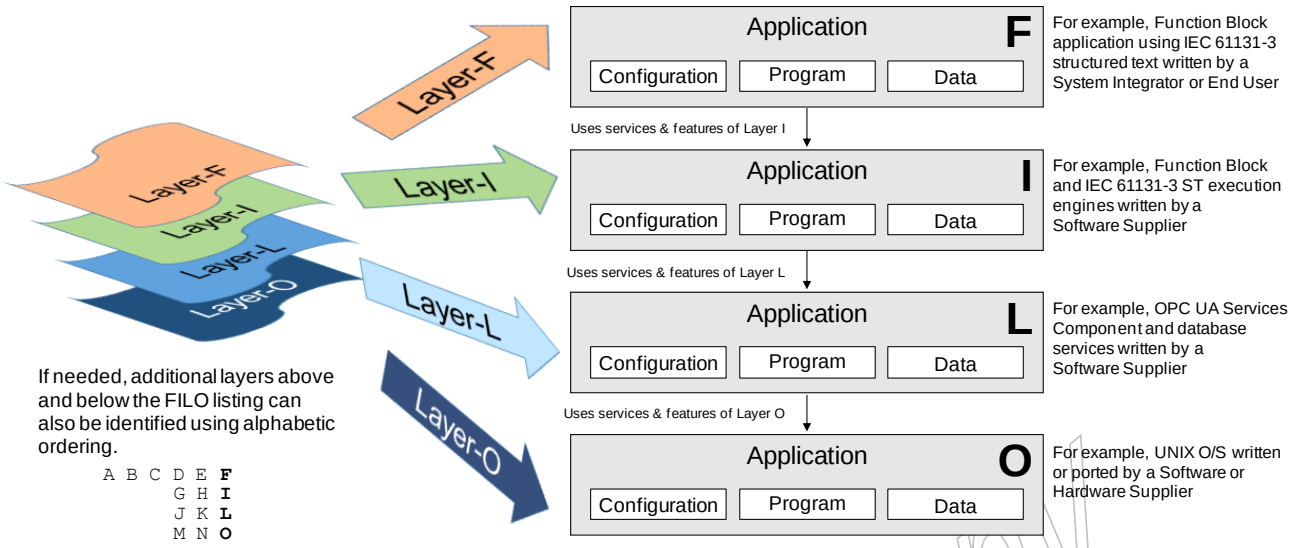

Figure 3: FILO Model of Applications

Layer-F applications are those that are defined via the O-PAS configuration specifications defined in the subparts of O-PAS Part 6 – Information and Exchange Models. These include function blocks, alarm applications, IEC 61131-3 programs, and IEC 61499-1 applications. This also includes the basic configuration information defined in O-PAS Part 6.2 – Information and Exchange Models: Basic Configuration. The Layer-F applications may also include function block libraries that can be used in the construction of Layer-F applications or to build additional Layer-F libraries. Layer-F function block applications using IEC 61131-3 and IEC 61499-1 are defined in O-PAS Part 6 and other application types will be considered in a future version of the O-PAS Standard.

Layer-I applications are typically defined in an IT programming language (such as C#, C++, Python, GO, ADA, etc.). Layer-I provide the interfaces needed to execute the Layer-F applications and operate on the Layer-F configuration information. A future version of the O-PAS Standard will include interface definitions to support platform-independent Layer-I applications.

Layer-L applications are typically libraries or service programs that are defined in a typical IT language (such as C#, C++, Python, GO, ADA, etc.) which provide services to the Layer-I applications. Layer-L applications are generally platform-dependent, in that they have been compiled into a binary format for a specific CPU architecture and O/S.

Layer-O applications are typically parts of the underlying O/S which provides the environment for the Layer-L and Layer-I applications. In the O-PAS Technical Architecture this is identified as the platform O/S, or an O/S running above a hypervisor/separation kernel.

3.4 Equipment using the O-PAS Communication Interface (OCI)

A system may contain equipment which does not conform to a Distributed Control Platform (DCP) hardware profile and has O-PAS Communication Interface (OCI) functionality, defined as a type of DCN in Section 3.2. Such equipment provides the capability of participating in OCF communication and potentially hosting applications. Equipment with OCI functionality is visible

© 2021 The Open Group, All Rights Reserved
Evaluation Copy. Not for redistribution

through the OCF similar to other DCNs. Possible examples are PCs, field instruments, DCSs, PLCs, analyzers, safety systems, and electrical systems.

The OCI provides a configurable interface to the OCF. It can also be applied to equipment that does not conform to a DCP hardware profile.

Different aspects of the OCF interface are defined in different places in the O-PAS Standard. To learn more about the OCF, see:

1. The interfaces defined in O-PAS Part 2 – Security
2. The services defined in O-PAS Part 4 – O-PAS Connectivity Framework (OCF)
3. The System Management Interface defined in O-PAS Part 5 – System Management
4. The Configuration Management Interface defined in O-PAS Part 6.1 – Information and Exchange Models: Overview and Interfaces
5. The basic configuration information defined in O-PAS Part 6.2 – Information and Exchange Models: Basic Configuration

3.5 Business Function Connectivity

A system built with O-PAS conformant components may contain connectivity to business functions (such as Enterprise Resource Planning (ERP), Material Resource Planning (MRP), Product Lifecycle Management (PLM), Supply Chain Management (SCM), and other business systems running in IT data centers).

Connectivity to such business software is through applications running in DCNs. The connection between the OCF and business networks is shown in Figure 1 connected through a firewall as an example, following the recommended best practice as documented in the ANSI/ISA 62443 standards.

3.6 Internal and External OT Data Centers

A system built with O-PAS conformant components may support communication to internal and external Operations Technology (OT) data centers to support applications running IEC 62264 Level 2 and Level 3 functions. In addition, OT data centers may execute functions not defined in the O-PAS Standard, such as offline engineering tools, simulation tools, and management tools.

Connection to OT data centers is shown in Figure 1 controlled by a firewall between the OCF and the external OT data center as an example, following the recommended best practice as documented in the ANSI/ISA 62443 standards. However, applications running in OT data centers may participate directly in OCF communication, if allowed by local security rules.

© 2021 The Open Group, All Rights Reserved
Evaluation Copy. Not for redistribution

4 O-PAS Interface Overview

4.1 Components and Interfaces

The Technical Architecture as fully envisioned identifies the principal components (boxes) and associated interfaces (arrows and file symbols) of an O-PAS conformant system and is illustrated in Figure 4.

- The import/export formats for the Layer-F applications are specified in the subparts of O-PAS Part 6 – Information and Exchange Models
- The download/upload formats for the Layer-F applications and configurations are specified in the subparts of O-PAS Part 6 – Information and Exchange Models
- The dark blue interfaces to the components are specified in O-PAS Part 4 – O-PAS Connectivity Framework Interface, O-PAS Part 5 – System Management, the subparts of O-PAS Part 6 – Information and Exchange Models, and O-PAS Part 7 – Distributed Control Platform
- The red interfaces and the nesting and relationships between elements in the DCN box are planned for a future version of the O-PAS Standard, as further defined in Chapter 7
- The general functionality and examples of the components depicted as the gray boxes with white letters are described by the O-PAS Technical Architecture, but the implementation of the functionality is not defined

Evaluation Copy

© 2021 The Open Group, All Rights Reserved
Evaluation Copy. Not for redistribution

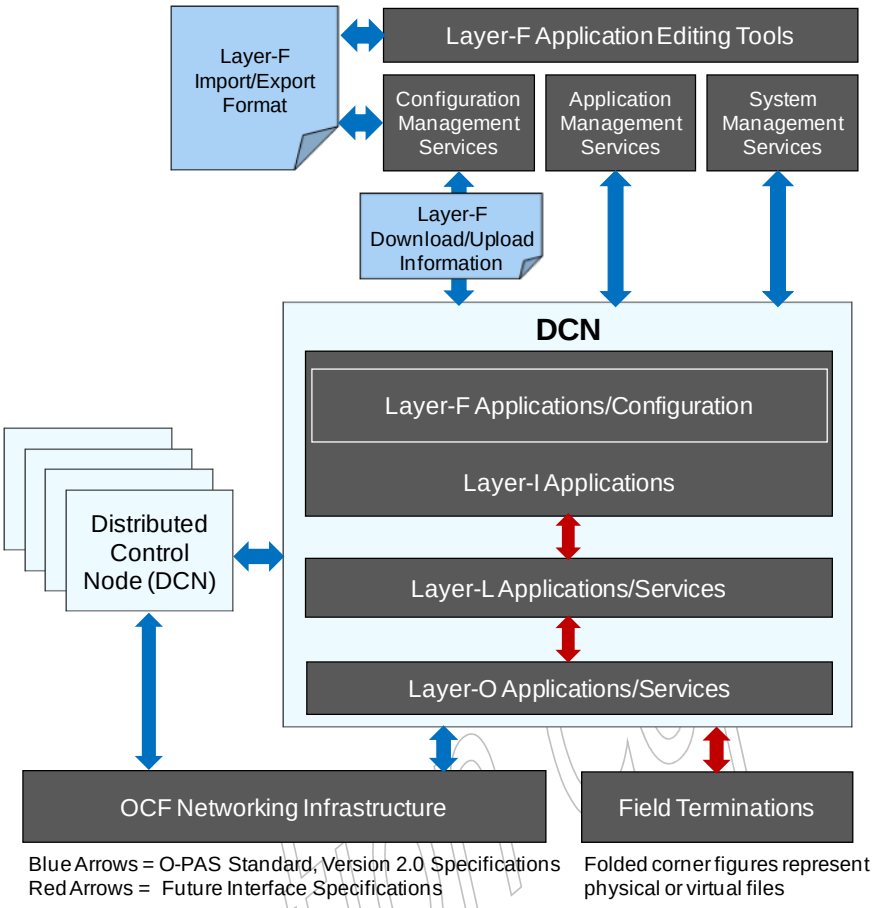

Figure 4: Principal Components and Interfaces

4.2 O-PAS Interfaces

Figure 5 expands on Figure 4 by showing the specific interfaces between O-PAS conformant components, management services, and the networking infrastructure for the O-PAS Standard, Version 2.1.

Notes

The "ball and cup" symbols are UML® symbols used to indicate interfaces between objects or systems. The "ball" is connected to the object or system implementing the interface. The "cup" is connected to the object or system consuming the interface.

The tags interfaces shown in Figure 5 have the following meanings:

- Interfaces with solid lines indicate software interfaces
- Interfaces with dashed lines and solid black circles indicate physical interfaces
- Network interfaces provided using OCF functionality are indicated with a "+"

© 2021 The Open Group, All Rights Reserved
Evaluation Copy. Not for redistribution

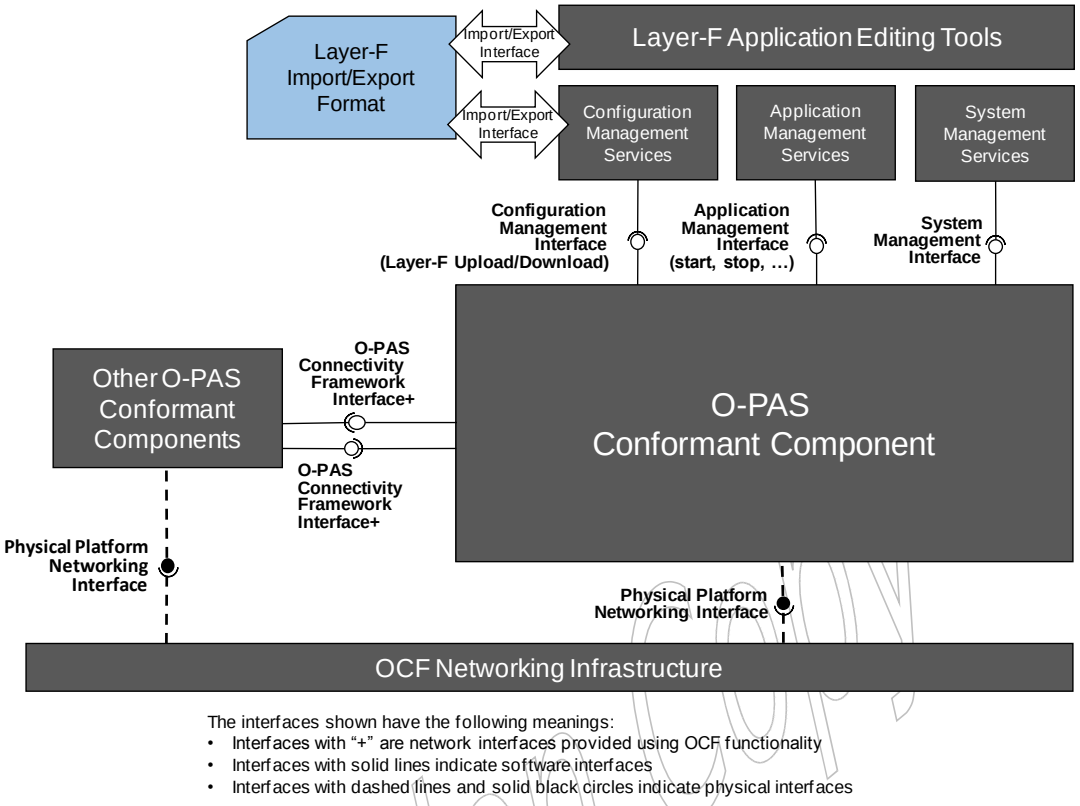

Figure 5: O-PAS Defined Interfaces

The interfaces defined in the O-PAS Standard, Version 2.1 are as follows:

- Information in the Layer-F application import/export format defines the configuration of a system of DCNs and applications that are created and maintained by external management services or tools, such as Layer-F application editing tools, configuration management services, application management services, and system management services
- The Configuration Management Interface defines the configuration management services used to manage the download and upload of configuration information in an O-PAS conformant component by configuration management services
- The Application Management Interface defines the application management services used to manage applications in an O-PAS conformant component by application management services
- The Connectivity Framework Interface defines the network protocols necessary for DCNs to communicate across the OCF
- The System Management Interface defines the system management services and information models used to manage the hardware and associated O/S software in an O-PAS conformant component by system management tools
- The Platform Networking Physical Interface defines the physical layer interface to the network

© 2021 The Open Group, All Rights Reserved
Evaluation Copy. Not for redistribution

4.2.1 Layer-F Import/Export and Download/Upload Formats

The Layer-F formats define the common information that is used to configure O-PAS conformant components. The purposes of the two Layer-F formats are to allow basic DCN configuration to be interoperable across different vendor implementations, and to provide a common mechanism for communicating the information with DCNs from different vendors. The basic configuration defines configuration information for each DCN; for example, signal names, signal types, alarm and condition information, DCN roles, and Layer-F applications.

The Layer-F import/export format is often organized by physical processing equipment asset (such as areas, process units, process cells, equipment modules, control modules, etc.) using hierarchies defined in IEC 61512-1 (ISA 88), IEC 62264 (ISA 95) and ISA-TR106, and by OCF network hierarchies.

The Layer-F import/export format also includes the specification of the platform and conformant component execution environments, such as:

- The information that characterizes capability and capacity requirements of applications, such as required support for the application services, timing requirements for cyclic programs, and required available memory
- The information that defines the capabilities and capacities of conformant components
- The information that defines the capabilities and capacities of platforms
- The information that defines the capabilities and capacities of the OCF, organized by network segment if appropriate
- Vendor-specific download information or an O-PAS conformant component, such as binary files or encoded configuration information

The information defined in Layer-F download/upload formats is generated by a vendor's Layer-F application editing tool❶.

The download information in the Layer-F import/export files would be used by a configuration management service to select what to download to each component❷. The information is downloaded using the Configuration Management Interface❸. The downloaded information is used to fill in the local storage that is exposed using an OCF information model❹. The run-time information is then made available using the OCF access methods❺, as illustrated in the example in Figure 6.

© 2021 The Open Group, All Rights Reserved
Evaluation Copy. Not for redistribution

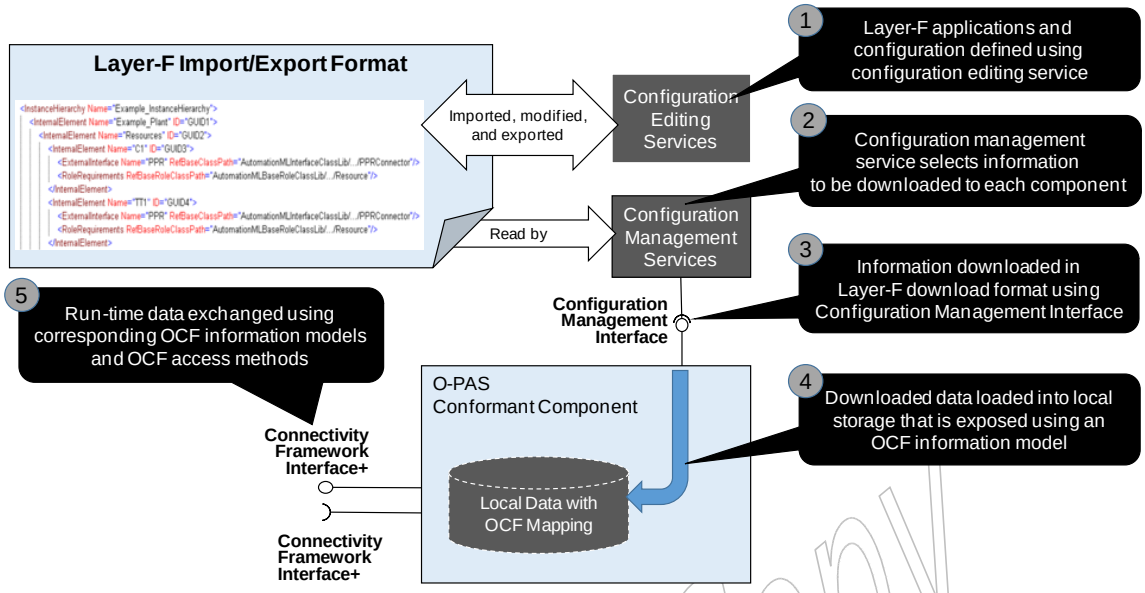

Figure 6: Example of Configuration Information and OCF Access

4.2.2 Configuration Management Interface

A system composed of O-PAS conformant components may contain thousands of configurable conformant components from multiple vendors. Managing component configurations download/upload in this multi-vendor environment requires common configuration management capabilities.

The Configuration Management Interface is used to download configuration information to a conformant component and to upload the configuration information from a conformant component. The upload could be used for purposes such as performing backups or comparisons of actual *versus* expected configurations.

4.2.3 Application Management Interface

A system composed of O-PAS conformant components may contain hundreds of distributed Layer-F applications executing in multiple vendor environments. Managing application startup, shutdown, and other application controls, this multi-vendor environment requires common application management capabilities.

The Application Management Interface is used to control the execution of Layer-F applications.

4.2.4 Connectivity Framework Interface

To meet the requirement to allow for real-time DCN communication in a system of components from multiple vendors, the Connectivity Framework Interface is defined in O-PAS Part 4 – Connectivity Framework Interface.

4.2.5 System Management Interface

A system composed of O-PAS conformant components may contain thousands of components from multiple vendors. Managing platform configurations, and providing platform maintenance

© 2021 The Open Group, All Rights Reserved
Evaluation Copy. Not for redistribution

support, in this highly distributed environment requires common system management functionality to be specified.

To meet the requirement to be able to manage a system of components from multiple vendors, the System Management Interface is defined in O-PAS Part 5 – System Management.

Evaluation Copy

© 2021 The Open Group, All Rights Reserved
Evaluation Copy. Not for redistribution

5 O-PAS Connectivity Framework (OCF)

The O-PAS Connectivity Framework (OCF) defines the framework services, using the Industrial Internet Consortium, Industrial Internet Connectivity Stack Model, as described in The Industrial Internet of Things Volume G5: Connectivity Framework. The OCF provides the transport services for messages, the services for data consisting of streams, events, and state information, and the information needed for distributed real-time control.

The OCF interfaces are defined in O-PAS Part 4 – O-PAS Connectivity Framework (OCF).

One of the main purposes of the OCF is to define the services for handling the information flows between applications. Any Layer-F application that exposes information to or reads information from other applications does so through the Connectivity Framework Software Interface, even if the corresponding applications are running in the same DCN.

Figure 7 illustrates the communications route, through the different parts of an O-PAS conformant system, when the accessed field data is on the local DCN.

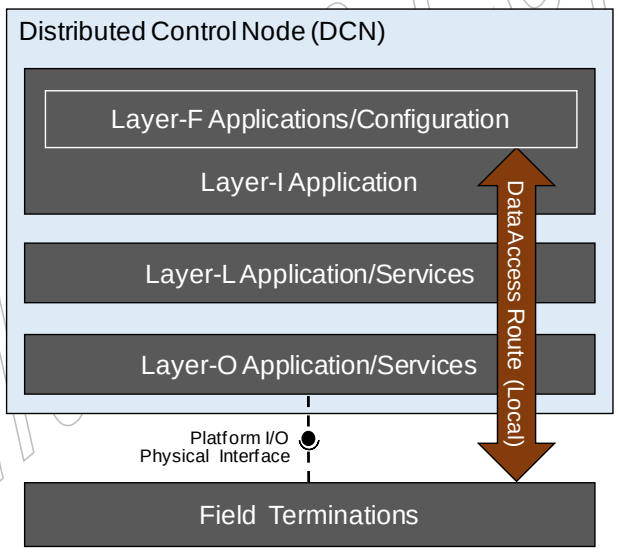

Figure 7: Local Data Access Route

Figure 8 illustrates the communication route, through the different parts of an O-PAS conformant system, when the field data is not on the local DCN. Components in the DCN (or other conformant component) provide the services and contain the information to determine the location of the data.

© 2021 The Open Group, All Rights Reserved
Evaluation Copy. Not for redistribution

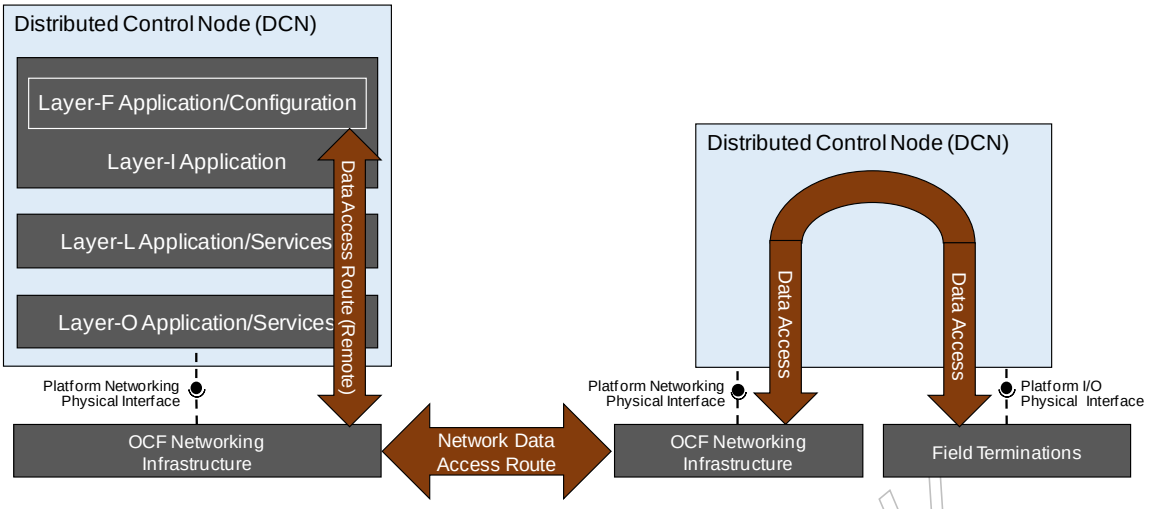

Figure 8: Network Data Access Route

Figure 9 illustrates how physical signals are handled through their transformation into Layer-F application programs, and out of application programs to physical outputs. It illustrates the final expected set of O-PAS Standards:

- An O-PAS defined physical interface between termination assemblies and I/O conversion elements performing analog to digital conversion (yellow lines)
- An O-PAS defined interface between the I/O conversion and computing elements (green lines)
- An O-PAS OCF defined interface (blue lines)
- An O-PAS defined interface between Layer-F application blocks (purple lines)
- Vendor-defined interfaces that interface the OCF exchanged signals into and out of service functions blocks (OCF_IN and OCF_OUT)

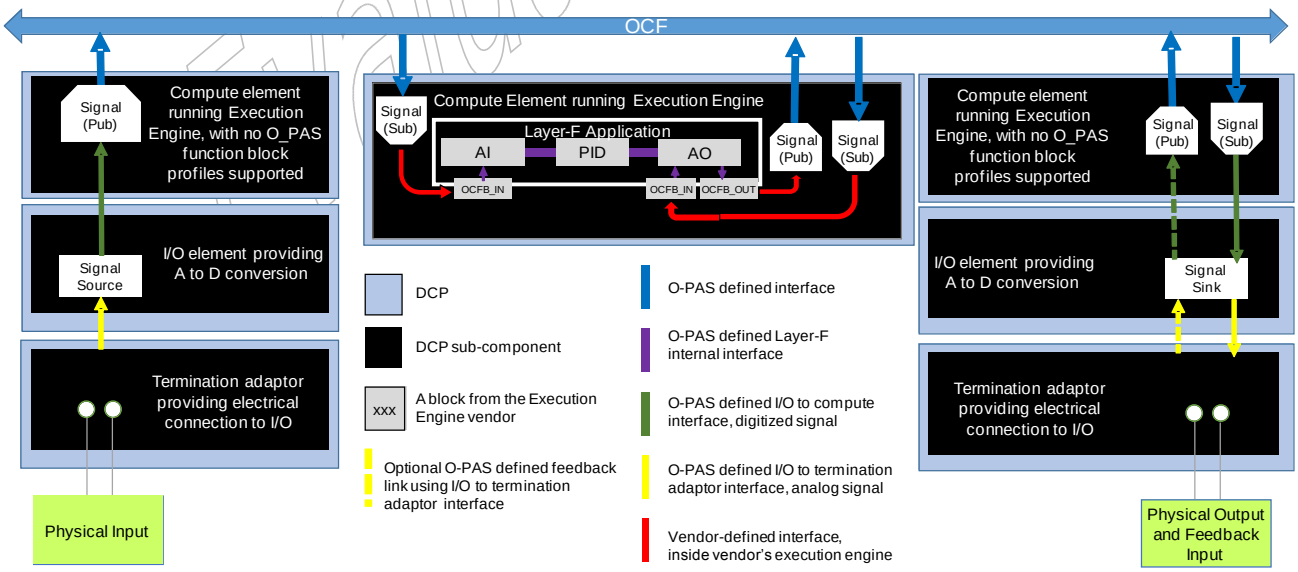

Figure 9: Physical Components, Signals, and Software Components

© 2021 The Open Group, All Rights Reserved
Evaluation Copy. Not for redistribution

Figure 10 illustrates the same data flows and standards but with different options for the physical platform. The right side illustrates a combined DCP, from a single vendor, in which the termination block to I/O element and I/O element to compute element are vendor-specific and not exposed. The right side shows an example of a combined compute element and I/O element with a vendor-specific internal interface, but with an O-PAS Standard interface to the termination assembly.

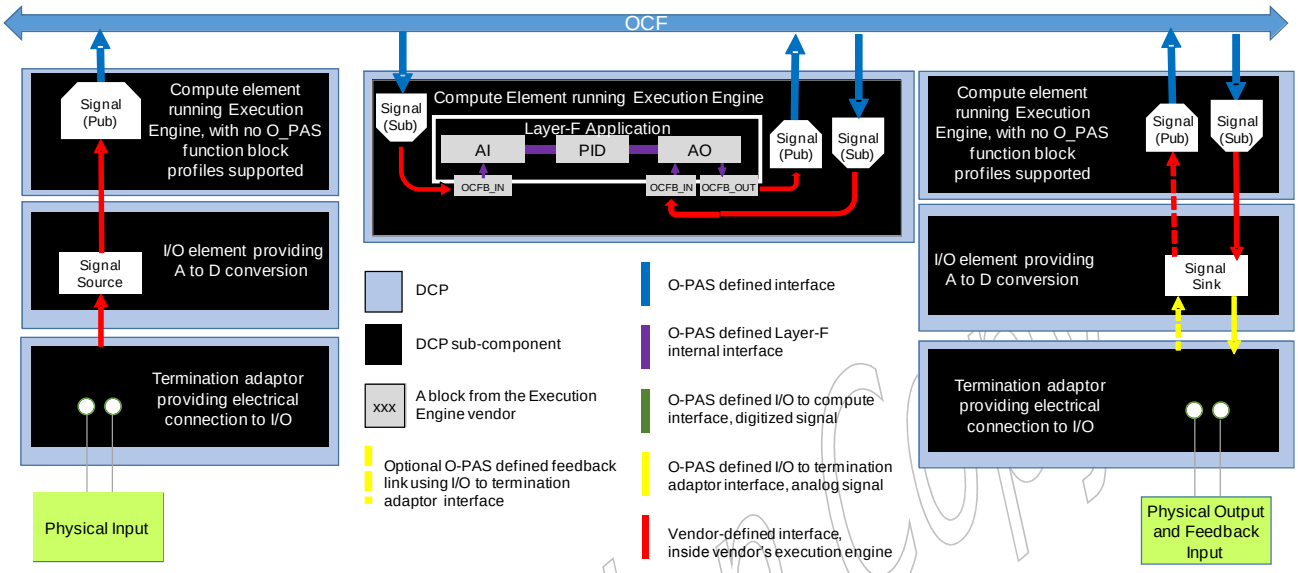

Figure 10: Alternate Physical Platform Options

Evaluation Copy

© 2021 The Open Group, All Rights Reserved
Evaluation Copy. Not for redistribution

6 System Security

A system composed of O-PAS conformant components may be made up of thousands of DCNs from multiple vendors. Managing security in the highly distributed O-PAS environment requires security to be specified in all components of the Technical Architecture: DCNs, platform-independent applications, Layer-I applications, Layer-L services, O/Ss, network devices (switches, routers, etc.). See O-PAS Part 2 – Security for additional information. Specific requirements for security functionality are defined in O-PAS Part 4 – O-PAS Connectivity Framework (OCF) and O-PAS Part 5 – System Management.

O-PAS conformant components will enable the development of secure systems, but no O-PAS interface standard can guarantee comprehensive security. It is the responsibility of the system owners to develop the continuous process of assessment of security threats, implementation of countermeasures, validation of the countermeasures, and correction of the system to prevent or reduce the impact of the risk. (See ANSI/ISA-62443-1-1 for information about Industrial Automation Control Systems security.)

To meet the requirement to be able to build secure platform-independent applications the Security Management Interface and the Security Services Interface are planned to be defined in a future version of the O-PAS Standard.

Evaluation Copy

© 2021 The Open Group, All Rights Reserved
Evaluation Copy. Not for redistribution

7 Planned Platform-Independent Application Interfaces

The platform-independent application interface specifications for Layer-I, Layer-L, and Layer-O are planned for a future version of the O-PAS Standard. The interfaces identified here are included to illustrate the eventual platform-independent applications and interchangeability capabilities of a system built from O-PAS conformant components. The interfaces shown in Figure 11 in black text are in Version 2.1, and the interfaces in gray text are planned for a future version to support platform-independent Layer-I and Layer-L applications. Figure 11 is an extension to Figure 5.

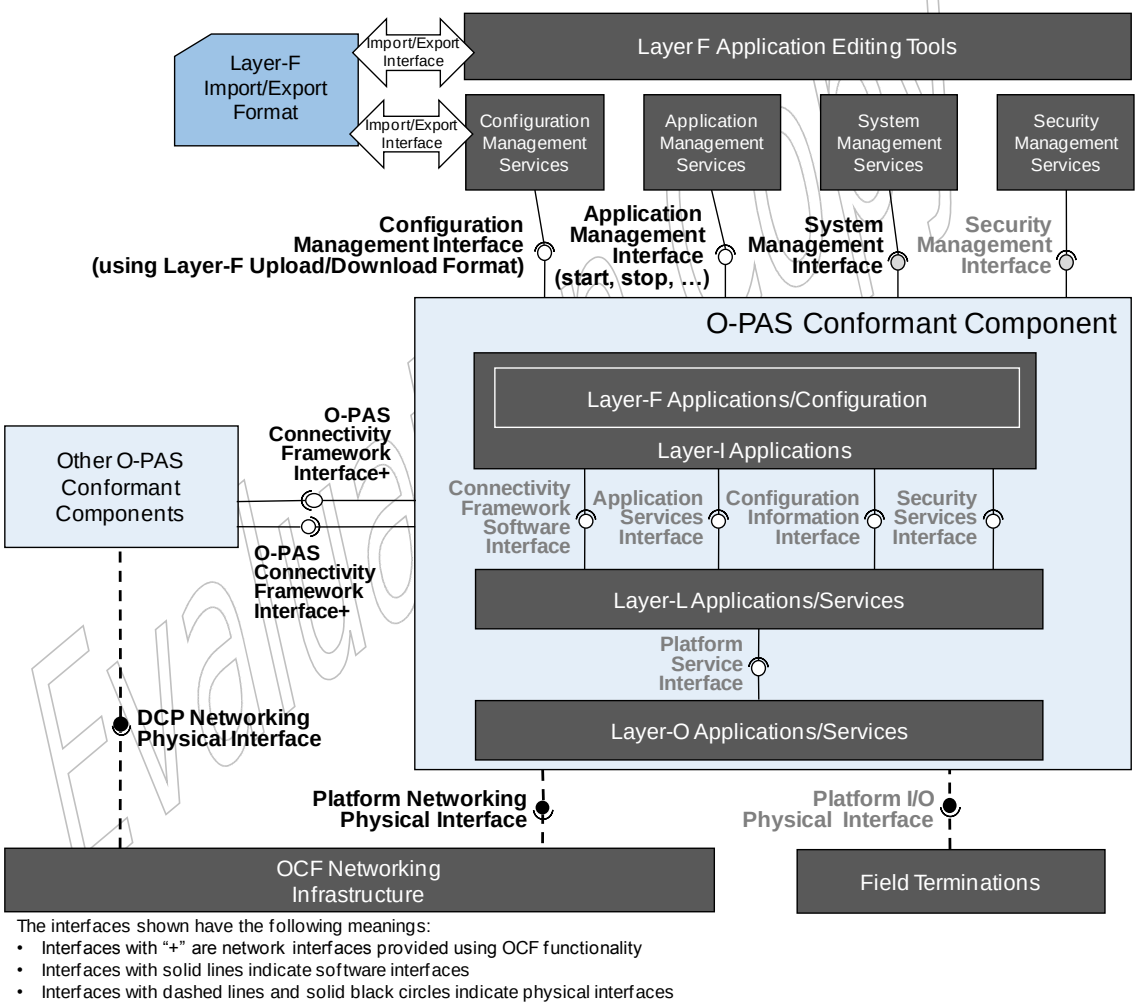

Figure 11: Layer-F, Layer-I, and Layer-L Application Interfaces

The platform-independent application interfaces will define the APIs that are available to applications. The purpose of the interfaces is to allow applications to be platform-independent, commonly configured, and commonly managed.

© 2021 The Open Group, All Rights Reserved
Evaluation Copy. Not for redistribution

It is planned for the platform-independent application interfaces to be a set of abstract service definitions which can be implemented in different languages. This allows the system to evolve as additional computer languages and APIs are developed. The services will contain the minimum set of services required to run an O-PAS conformant application as well as other expected applications.

The platform-independent application interfaces will specify the complete interface between platform-independent application software and the underlying platform and libraries. The interface definitions will include the syntax and semantics of the programmatic interface and all necessary protocol and data structure definitions.

The seven additional planned interfaces for platform-independent applications are illustrated in Figure 12. Applications may also be consumers of services from proprietary systems; however, using these services would prevent platform independence if the proprietary services are not available on the target platforms.

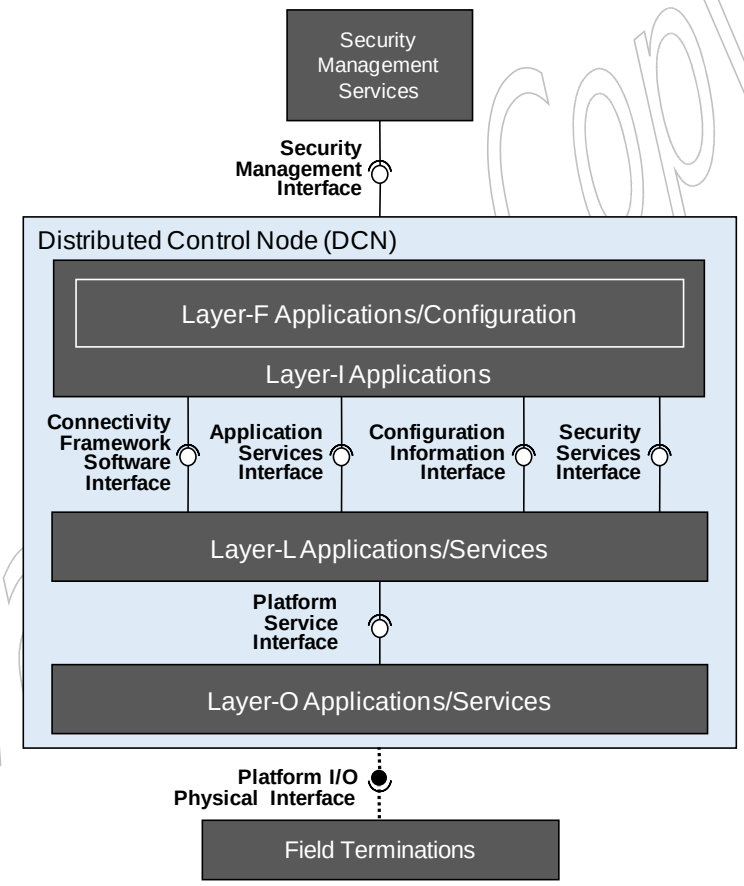

- Interfaces with solid lines indicate software interfaces
- Interfaces with dashed lines and solid black circles indicate physical interfaces

Figure 12: Future Possible Application Interfaces

© 2021 The Open Group, All Rights Reserved
Evaluation Copy. Not for redistribution

Figure 13 illustrates all of the Version 2.1 and planned future software interfaces to be defined in the O-PAS Standard:

- Layer-F import/export formats define the interfaces to external tools used to create and manage applications and configurations
- Layer-F download/upload methods define the interfaces to DCNs and OCIs used to manage O-PAS conformant components
- Layer-F download/upload formats define the standard data used in DCNs and OCIs to configure O-PAS conformant components
- Layer-F applications will usually be run by a Layer-I application
- Layer-I applications are consumers of Layer-L applications and services and associated data
- Layer-I applications may also be consumers of services and data from proprietary systems
- Layer-L applications and services are providers of services and associated data to applications and external management tools
- Layer-L applications and services are consumers of services and associated data from the Layer-O applications and services and from external management tools
- Layer-L applications and services may also be consumers of other services and data as needed
- Layer-O applications and services are providers of services and associated data
- Layer-O applications and services are consumers of services and associated data from the physical infrastructure and external management tools
- Layer-O applications and services may also be consumers of services and data from proprietary systems

Evaluation Copy

© 2021 The Open Group, All Rights Reserved
Evaluation Copy. Not for redistribution

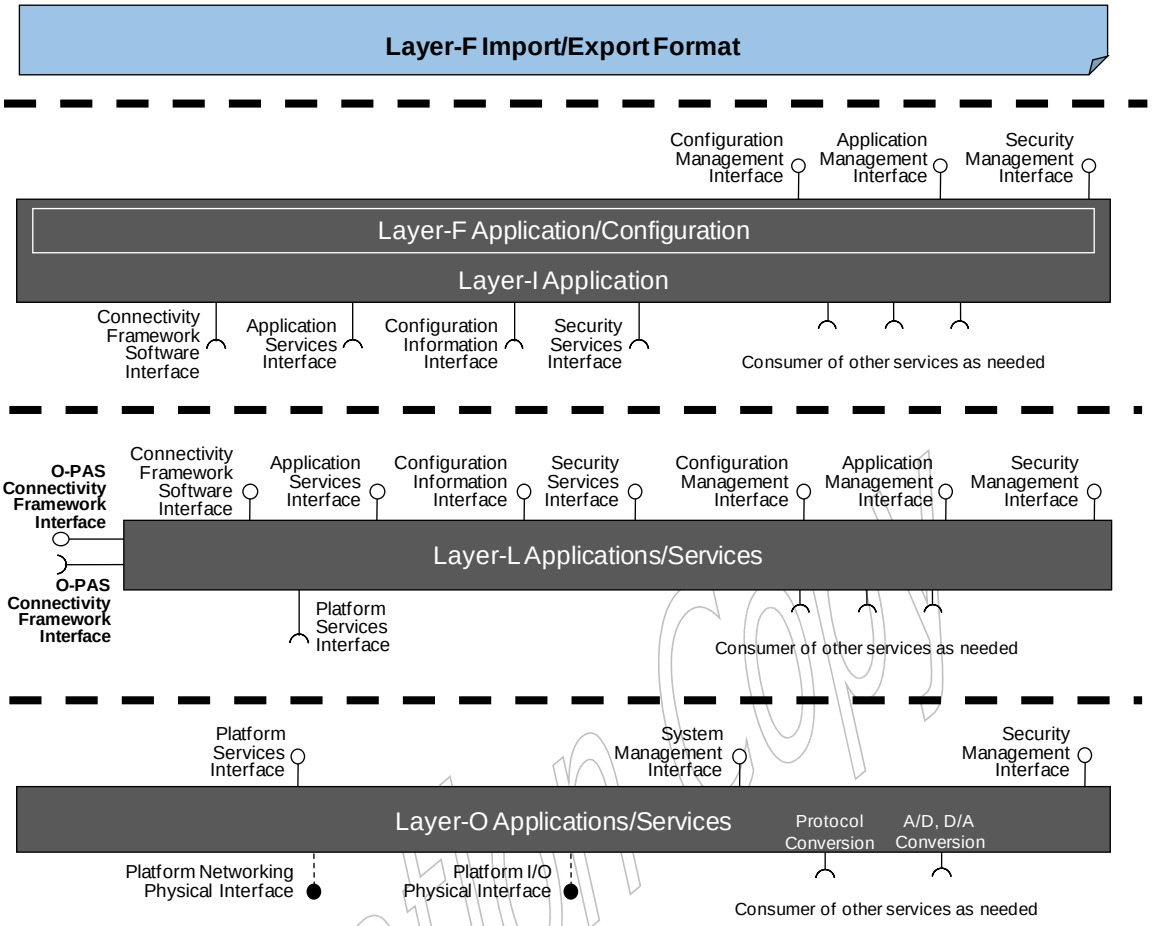

Figure 13: O-PAS Version 2.1 and Planned Interfaces

Planned interfaces for a future version of the O-PAS Standard include:

- Security Management Interface
- Security Services Interface
- Connectivity Framework Software Interface
- Application Services Interface
- Configuration Information Interface
- Platform Services Interface
- Platform I/O Physical Interface

7.1 Security Management Interface

The Security Management Interface is a network interface that defines services and information models used to manage security in an O-PAS conformant component by security management services.

© 2021 The Open Group, All Rights Reserved
Evaluation Copy. Not for redistribution

The services to be provided by the Security Management Interface are planned to be defined in a future version of the O-PAS Standard.

7.2 Security Services Interface

The Security Services Interface is a software interface that provides security management available to Layer-I applications, Layer-L applications/services, or Layer-O applications/services that manage their security, including system security services provided by the underlying platform.

The services to be provided by the Security Services Interface are planned to be defined in a future version of the O-PAS Standard.

7.3 Connectivity Framework Software Interface

The Connectivity Framework Software Interface is a software interface that defines the services and information models used by Layer-I, Layer-L, and Layer-O applications to communicate using the OCF.

The services to be provided by the Connectivity Framework Software Interface are planned to be defined in a future version of the O-PAS Standard.

7.4 Application Services Interface

The Application Services Interface is a software interface that defines the services and information models used by applications to access Layer-L services, including system services provided by the underlying Layer-O application/services, and also exposes the application status information.

The services to be provided by the Application Services Interface are planned to be defined in a future version of the O-PAS Standard.

7.5 Configuration Information Interface

The Configuration Information Interface is a software interface that specifies the services and information models for Layer-I applications to make the configuration information available to Layer-I applications or Layer-L applications/services, and also exposes the application configuration information used by the application.

The services to be provided by the Configuration Information Interface are planned to be defined in a future version of the O-PAS Standard.

Figure 14 illustrates a possible use of the configuration interfaces, with an internal data store that is used to hold the configuration information, making it available to both configuration management tools and to applications.

© 2021 The Open Group, All Rights Reserved
Evaluation Copy. Not for redistribution

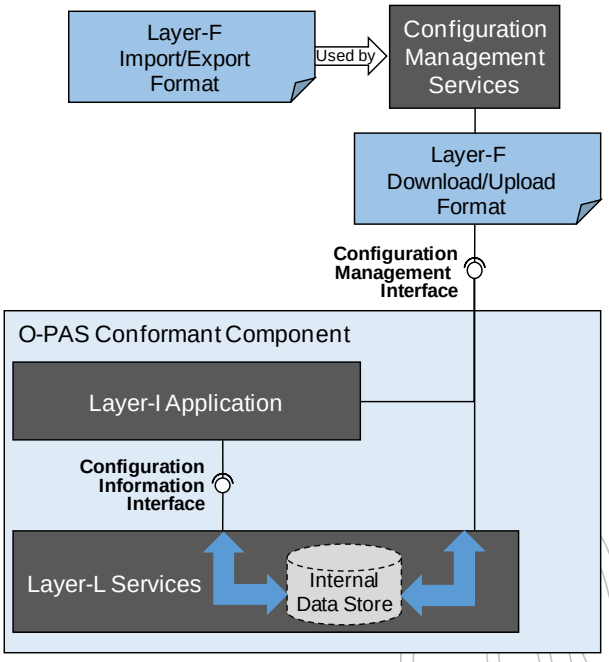

Figure 14: Example of Configuration Information Flows

7.6 Platform Services Interface

The Platform Services Interface is a software interface that provides access to the underlying O/S services, allowing applications to be written independently from the platform hardware and software. The interface is planned to cover services such as memory management, thread management, task and program control, persistent storage management, connection to the platform I/O, and connection to the physical network hardware.

The services to be provided by the Platform Services Interface are planned to be defined in a future version of the O-PAS Standard.

7.7 Platform I/O Physical Interface

The Platform I/O Physical Interface is a hardware specification that defines the interface to I/O termination points and specifies Size, Weight, and Power (SWaP) physical platform profiles.

The Platform I/O Physical Interface is a specification of the hardware interface to connect physical I/O signals to a DCN. It will also be a specification of the hardware interface to connect DCNs with and without I/O into a physical frame or backplane with power and network connections.

The specification of the Platform I/O Physical Interface is planned to be defined in a future version of the O-PAS Standard.

The purpose of the Platform I/O Physical Interface is to support interchangeability of components, such as I/O processing components, compute components, and I/O termination components.

© 2021 The Open Group, All Rights Reserved
Evaluation Copy. Not for redistribution

Platform profiles are used to identify different types of physical infrastructure, from fixed-size, weight, and power modules that can fit into an O-PAS framework or backplane, to general-purpose PCs and servers with standard Ethernet connections.

The planned Platform I/O Physical Interface will define the following items:

- I/O termination standards, such that a standard removable Terminal Assembly (TA) will be usable with any O-PAS conformant I/O module
- DCN form factor, such as SWaP requirements and heat duty
- DCN mounting structures, with power and network connections
- DCN I/O standard types

7.8 Typical Layer-L Application and Service Functions

Some typical functions that could be performed by a Layer-L application or service may include:

- OCF data provider functions
- OCF data consumer functions
- OCF data publisher functions
- OCF data subscriber functions
- Access to standard configuration information
- Mapping local name space to physical name space
- Application management for platform-independent applications and DCF services
- License management services
- Backup and recovery services
- Location-independent tag/data services
- Access to platform services

Layer-L services may be platform-dependent or may be platform-independent, depending on the profile followed.

7.9 Platform-Dependent Applications

Applications are not required to be platform-independent, and may be dependent on a specific environment. Platform-dependent applications are outside the scope of the O-PAS Standard, and may use native platform services, native O/S services, services defined in the Application Services Interface, services defined in the Configuration Information Interface, or services defined in the OCI.

© 2021 The Open Group, All Rights Reserved
Evaluation Copy. Not for redistribution

Examples of platform-dependent applications include:

- Interface to a dedicated device (such as a chromatograph, boiler control, valve array, spectrometer, blender, etc.)
- Gateway to a non-OCF network
- A program (such as applications written in ADA, Pascal, C++, Perl, Python, Visual Basic, etc.) with a proprietary program download and control interface

Evaluation Copy

© 2021 The Open Group, All Rights Reserved
Evaluation Copy. Not for redistribution

A Use-Cases

This appendix defines various example system structures that could be built using O-PAS components. The list is not meant to be all-inclusive, and is only intended to illustrate the range of possible structures that can be supported. The figures do not show the external management tools that would be used to configure and support the system.

A.1 Small Systems

This section defines envisioned small system structures, ranging from a few I/O points to more I/O and connectivity, to legacy PLCs, DCSs, and field networks.

A.1.1 DCN Only

This is an example of a DCN-only system where the computing capacity of the DCNs is sufficient for the project. Figure 15 illustrates the simple DCN system, where DCNs with I/O provide the capacity to run the required applications. The profiles for the DCNs are not shown, but the assumption is that some DCN profiles are sufficient to run applications.

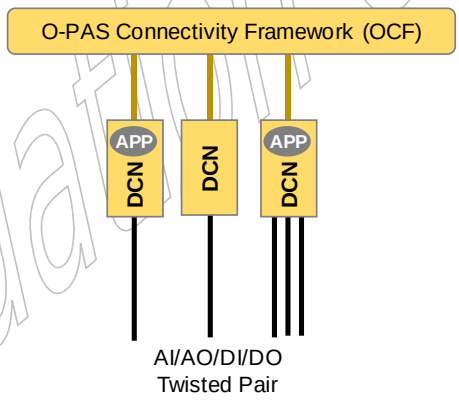

Figure 15: DCN-Only Configuration

A.1.2 DCNs and Legacy PLC

This is an example of a system with DCNs and a legacy PLC. Figure 16 illustrates this structure, where DCNs with I/O provide the capacity to run the required applications and a DCN acts as a gateway to a legacy PLC to make its information available to the OCF. The profiles for the DCNs are not shown, but the assumption is that some of the DCN profiles are sufficient to run standard or custom applications.

© 2021 The Open Group, All Rights Reserved
Evaluation Copy. Not for redistribution

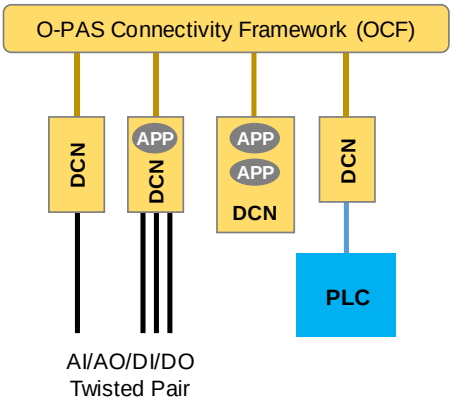

Figure 16: DCN and Legacy PLC

A.1.3 DCNs and PLC with OCI

This is an example of a system with DCNs, legacy PLC, and a PLC with an embedded OCI. Figure 17 illustrates this system structure, where DCNs with I/O provide the capacity to run the required applications, a DCN acts as a gateway to a legacy PLC to make its information available to the OCF, and a PLC with an embedded OCI makes its information available to the OCF and provides OCF information to the PLC. The profiles for the DCNs are not shown, but the assumption is that some of the DCN profiles are sufficient to run standard or custom applications.

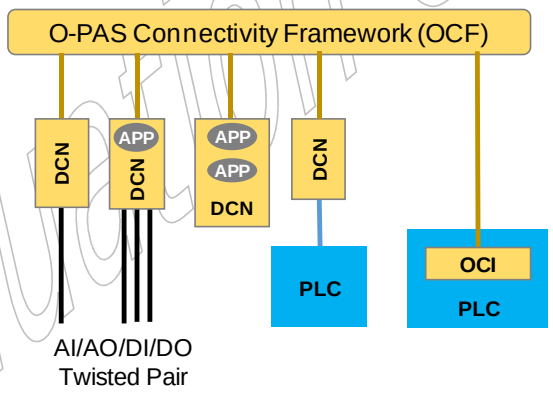

Figure 17: DCN and PLC with Embedded OCI

A.1.4 DCN with Legacy DCS and Field Networks

In a DCN with legacy DCS and field networks system structure, the computing capacity of the DCNs is sufficient for the project. Figure 18 illustrates this system structure, where DCNs with I/O provide the capacity to run the required applications, a DCN acts as a gateway to a legacy DCS to make its information available to and from the OCF, and a DCN acts as a gateway to field networks to make their information available to and from the OCF. The profiles for the DCNs are not shown, but the assumption is that some of the DCN profiles are sufficient to run standard or custom applications.

© 2021 The Open Group, All Rights Reserved
Evaluation Copy. Not for redistribution

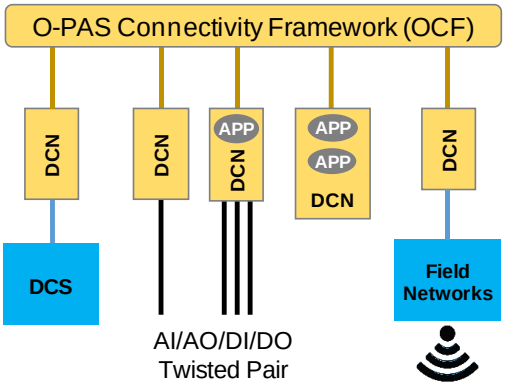

Figure 18: DCN and Legacy DCS and Field Networks

A.2 Medium and Large Size Systems

A.2.1 Medium Size Brownfield Example

In this example an existing system (the brownfield) is extended with additional capability by the addition of O-PAS conformant components. In the example in Figure 19, additional I/O is added to DCNs, DCNs act as gateways to PLCs, machinery monitoring, and safety system information, and an ACP is added to run Layer-F and Layer-I applications that may be too large to run in the gateways or I/O DCNs. The existing DCS is shown as having an embedded OCI so that selected information is available through the OCF.

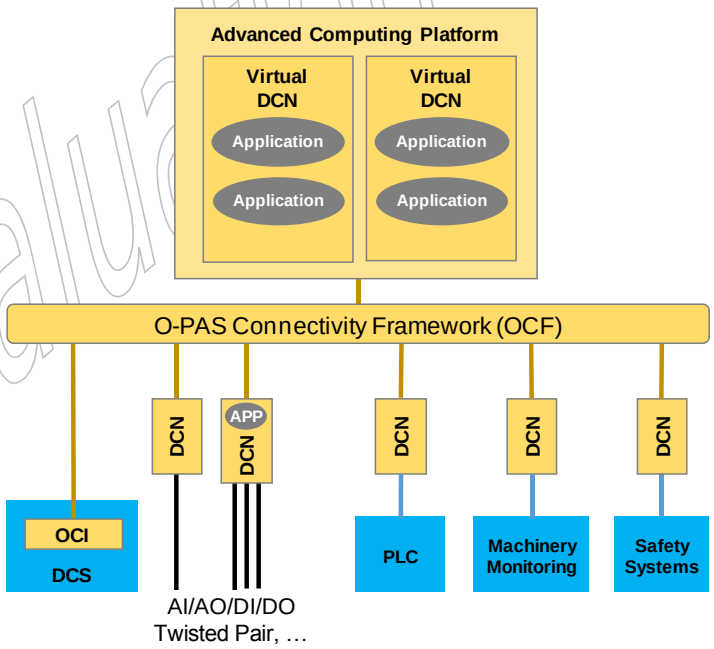

Figure 19: Medium Size Brownfield Example

A.2.2 Medium Size Greenfield Example

In this example a new system is being built using O-PAS conformant components. In the example in Figure 20, DCNs with and without I/O provide computing capability, other devices

© 2021 The Open Group, All Rights Reserved
Evaluation Copy. Not for redistribution

(such as analyzers, machinery monitoring, field networks, safety systems, and electrical systems) all have embedded OCI functionality and the ability to run applications, and an ACP is added to run applications that may be too large to run in the gateways or I/O DCNs.

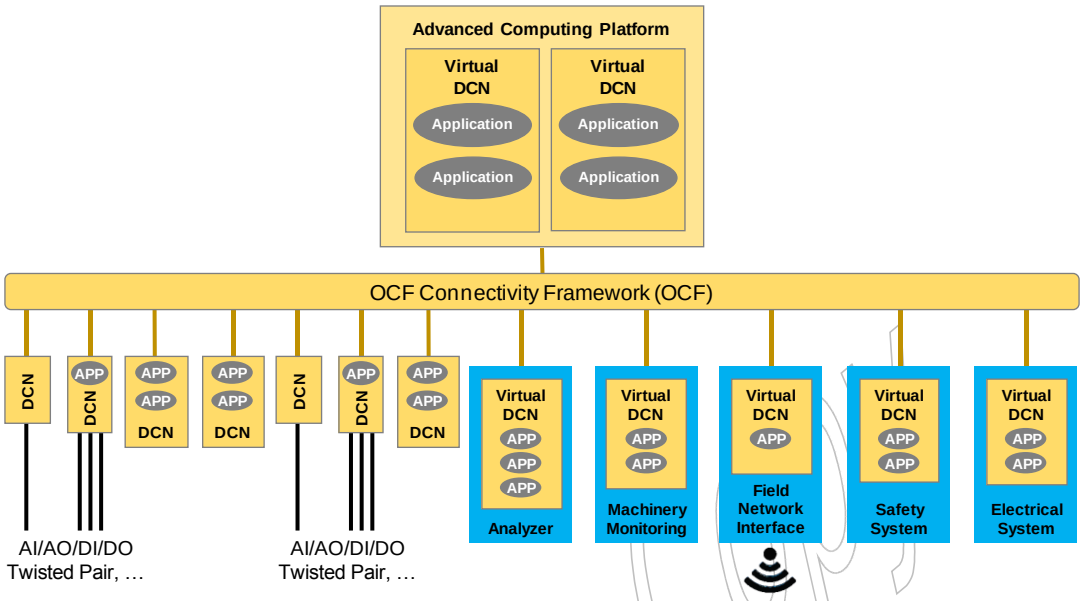

Figure 20: Medium Size Greenfield Example

A.2.3 Large Greenfield Example

In this example a new large system is being built using O-PAS conformant components. In the example in Figure 21, DCNs with and without I/O provide computing capability, other devices (such as analyzers, machinery monitoring, field networks, safety systems, and electrical systems) all have embedded DCF functionality, and an ACP is added to run applications that may be too large to run in the gateways or I/O DCNs. Additional connections are shown to enterprise data centers for connectivity to business-level functions, through applications in a DCN. Additionally, an external data center is shown, which has the capability of DCNs to run tasks such as engineering services and simulations.

© 2021 The Open Group, All Rights Reserved
Evaluation Copy. Not for redistribution

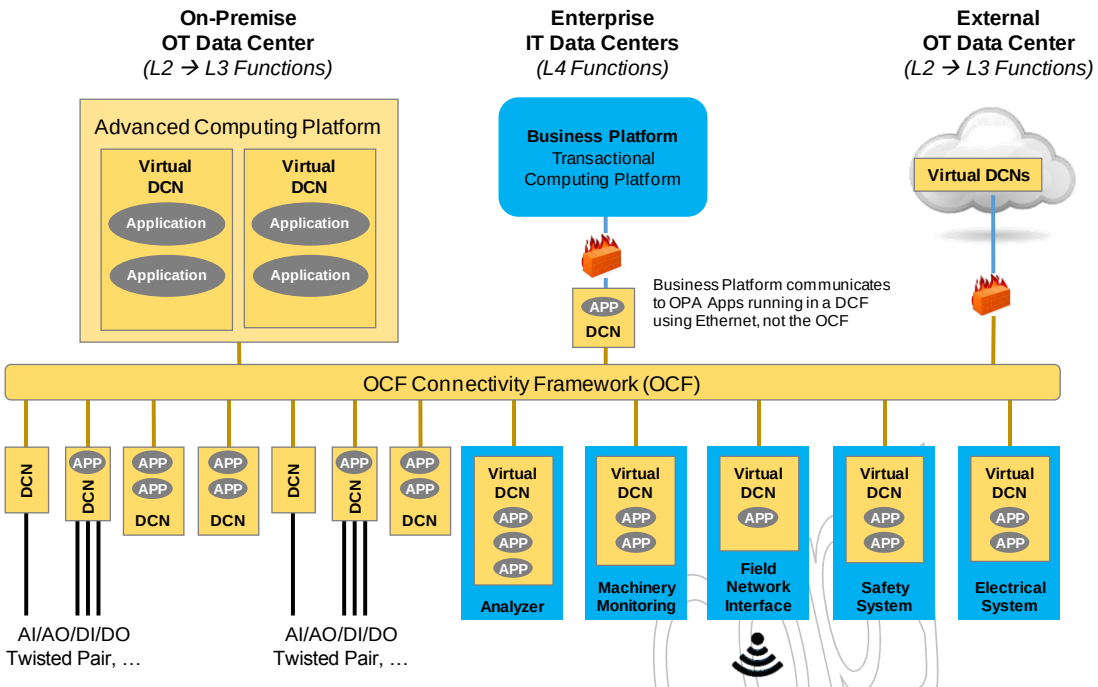

Figure 21: Large Size Greenfield Example

A.3 Integrated Device Example

This is an example of an integrated device that can participate in the OCF by making its local information available and by accepting the basic OCI configuration but does not have the capability of executing Layer-F applications or platform-independent applications.

Examples of basic OCI configuration include:

- Data location/data name (signal)/data type and alarm information
- DCN capability configuration information
- OCF network configuration information
- System management information
- Security and access rights information

Essentially this could be an I/O termination node, a data storage node, or a DCN with embedded functionality that does not include the capability for running Layer-F applications. Figure 22 illustrates an integrated platform-dependent O-PAS conformant component. It would be able to send and receive information (configuration definitions, service requests, service responses, etc.), support system management functions, and support the minimum application management functions for an embedded internal application.

© 2021 The Open Group, All Rights Reserved
Evaluation Copy. Not for redistribution

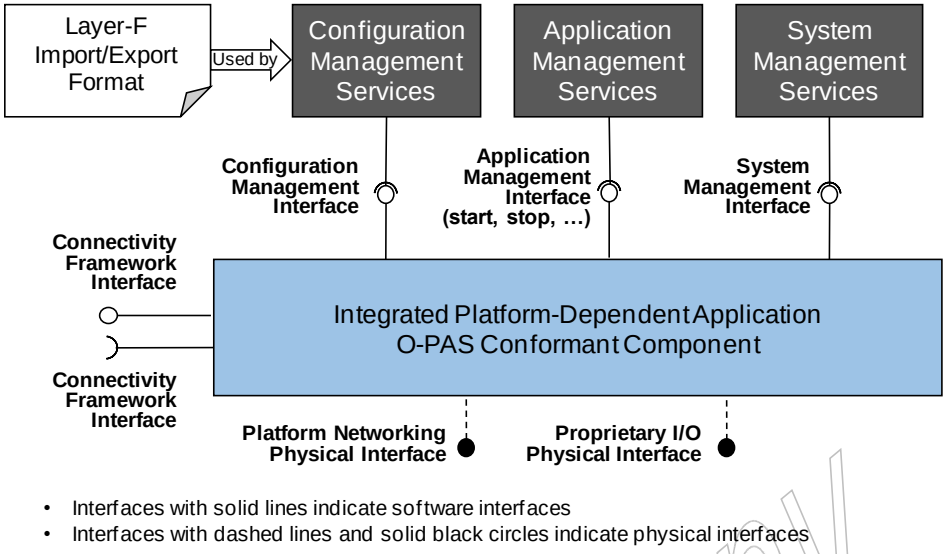

Figure 22: Integrated Device

A.4 Integrated Device Example with Layer-F Application Support

An integrated device that can participate in the OCF by:

- Making its local information available
- Accepting information in the Layer-F application/configuration format
- Providing the capability to execute Layer-F applications (for example, function blocks)

This example also has the capability of executing platform-dependent applications, but does not have the capability of supporting platform-independent applications.

Essentially this is a DCN with fixed control code execution capability, such as a dedicated function block controller, or a device that has the capability to run downloaded Layer-F applications. This concept is illustrated in Figure 23, where the configuration information includes a function block program, and a platform-dependent application provides a function block execution environment.

© 2021 The Open Group, All Rights Reserved
Evaluation Copy. Not for redistribution

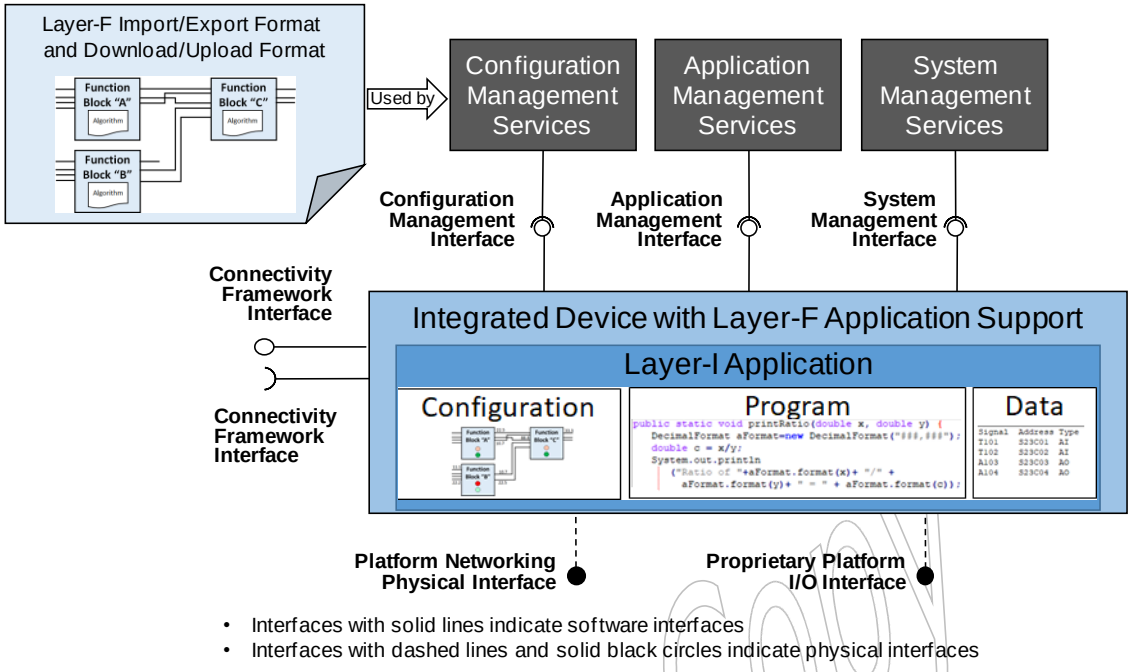

- Interfaces with solid lines indicate software interfaces
- Interfaces with dashed lines and solid black circles indicate physical interfaces

Figure 23: Integrated Device with Layer-F Application Support

Evaluation Copy

© 2021 The Open Group, All Rights Reserved
Evaluation Copy. Not for redistribution

B Application Types and Layers

For the purposes of the O-PAS Standard, an application is considered a program and associated configuration information and data. The term “application” has different meaning for the different roles of the O-PAS Standard. Often, what is an application to one role (e.g., system integrator) is viewed as just configuration or data by another role (e.g., software supplier).

For example, a system integrator would define a function block application using the IEC 61131-3 Structured Text (ST) language and associated configuration information. The supplier of the function block 61131–3 program execution application would consider the system integrator information just configuration and data that the Layer-I function block execution application uses.

Figure 24 illustrates an example of the layers of applications and programs using the example above. The top level is intrinsically portable, because there is no recompilation required to execute companion specification applications on different DCNs. The middle layers could be portable if they only use the services of the lower levels, but may require recompilation based on the physical platform profile.

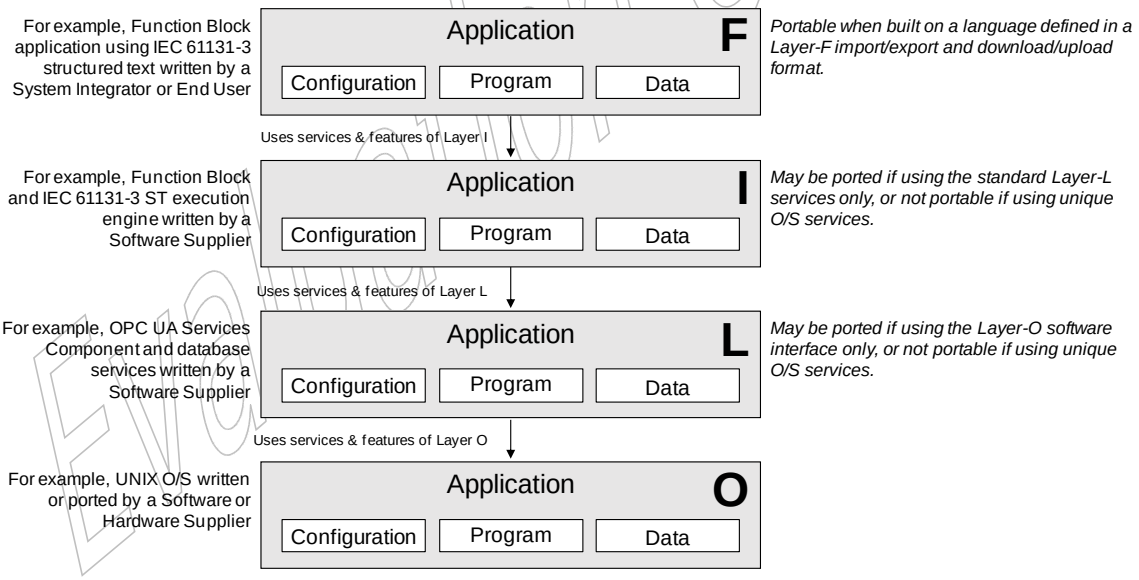

Figure 24: Example of Application Layers

Figure 25 illustrates application layering, using a typical IT set of tools. In this example the top level is a Java® program, represented as Java Byte Code and associated configuration and data. In the next level down, a Java Virtual Machine (JVM) executes the Java Byte Code, using Layer-L services. The Layer-L services components use the services of the underlying platform implemented as a UNIX® O/S provided by the platform supplier.

© 2021 The Open Group, All Rights Reserved
Evaluation Copy. Not for redistribution

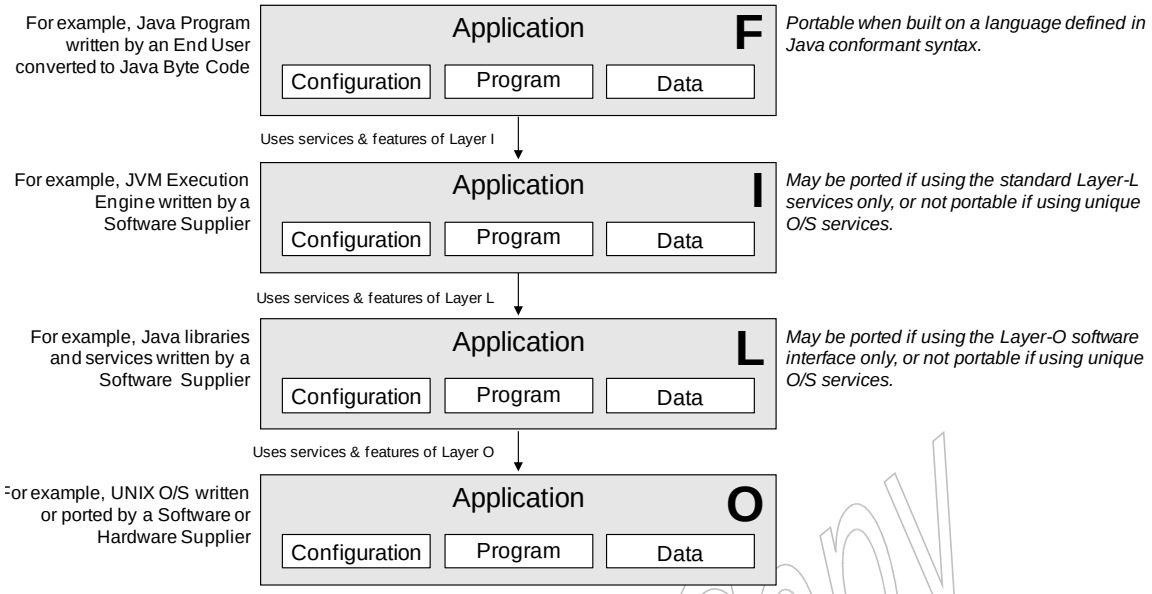

Figure 25: Application Layering Using Java Example

Figure 26 illustrates multiple different examples of deployment environments for applications. These range from bare metal applications and libraries to containers in virtual servers. The environments have been annotated with the FILO model terminology to illustrate the layers of applications and services that exist in many different deployments. The figure is derived from information provided by the Industrial Internet Security Forum (IIC).

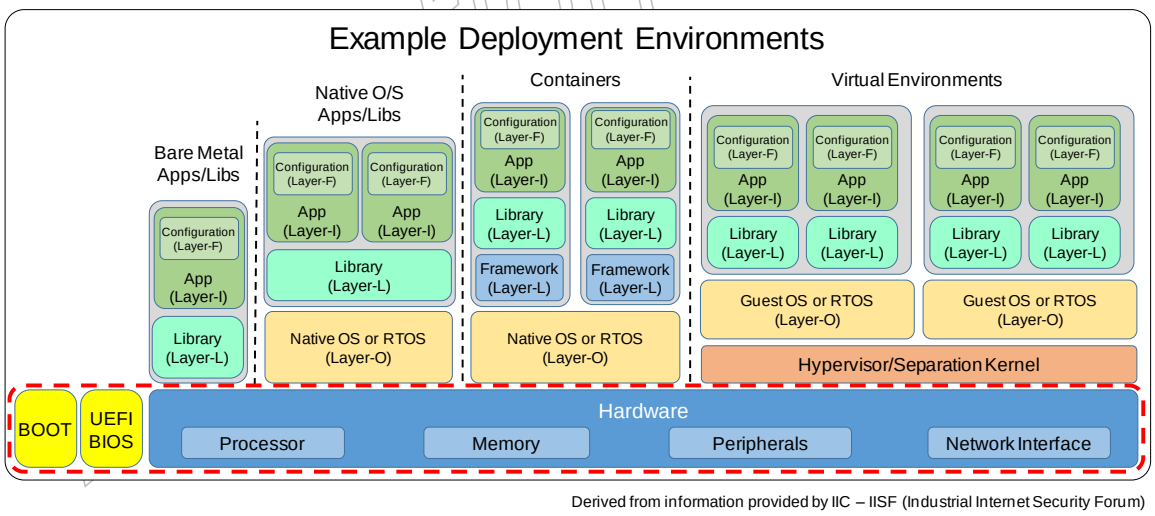

Derived from information provided by IIC – IISF (Industrial Internet Security Forum)

Figure 26: Example Deployment Environments for Applications

© 2021 The Open Group, All Rights Reserved
Evaluation Copy. Not for redistribution

C Rationale

In order to provide a stable architecture which meets the requirement for a multiple decade life-time, the architecture is defined to realize the quality attributes described below.

C.1 Interoperability

Interoperability is defined as the ability of two or more systems or components to exchange information and to use the information that has been exchanged (ISO/IEC/IEEE 24765:2017). It is achieved in the Technical Architecture through the OCF and associated information models defined in the Layer-F import/export and download/upload formats.

These formats define an interface and follow a set of international standards for Manufacturing Operations Management and Control – Level 2 and 3 information exchanges, as defined in IEC 62264-3.

C.2 Modularity

Modularity is defined by the degree to which a system or computer program is composed of discrete components such that a change to one component has minimal impact on other components (ISO/IEC/IEEE 24765:2017). This is achieved using DCNs as the modular architecture components:

- The architecture is defined such that DCNs can be replaced with equivalent DCNs, without impacting the operation of other components
- The DCN architecture includes the virtual DCNs and platform-independent applications; this allows applications to be changed and moved without impact on other components
- The concept of "profiles" is used to define DCNs as the components of modularity, such that components with the same profiles from different vendors have the same minimal functionality
- The DCN architecture is defined such that components can be replaced with equivalent conformant components, without impacting other parts of the system

C.3 Standard Conformance

Standard conformance is defined as developing or certifying components to meet all normative requirements of the published Standard. This is achieved through the definition of interface functions and information exchanges based on IEC, ISO, ISA, and other internationally recognized standards that have a means of testing conformance. All of the standard interfaces have conformance tests and profiles defined which describe what conformance tests are met to provide evidence of conformance.

© 2021 The Open Group, All Rights Reserved
Evaluation Copy. Not for redistribution

C.4 Scalability

Scalability is defined as the degree to which a system can have its capacities adjusted to meet system requirements. This is achieved through the ability to change the number of DCNs (scale out) and the ability to increase the capacity of individual DCNs (scale up), without any changes to the architecture and minimal impact on other components.

C.5 Portability

Portability is defined as the ease with which a system or component can be transferred from one hardware or software environment to another (ISO/IEC/IEEE 24765:2017). In this document, portability is defined as platform-independence. It is achieved through the Layer-F import/export and download/upload format specifications.

C.6 Technology Support

It is expected that network communication standards will be the longest living interoperability element, therefore the Technical Architecture is defined such that DCNs and embedded OCIs, implemented with original technology mappings (such as Ethernet IP, 5G, Wi-Fi) can easily be integrated with newer technology mappings through communication gateways.

Evaluation Copy

© 2021 The Open Group, All Rights Reserved
Evaluation Copy. Not for redistribution

D Abbreviations

For the OPAF Glossary and Abbreviations, see the definitions at: www.opengroup.org/open-process-automation-forum/glossary.

Evaluation Copy

© 2021 The Open Group, All Rights Reserved
Evaluation Copy. Not for redistribution

Index

ACP 17
ANSI/ISA 62443 standards 20
application 18
Application Management Interface 25
Application Services Interface 35
applications..... 46
business functions..... 20
components..... 21
concept diagram 16
Configuration Information Interface .. 35
Configuration Management Interface. 25
conformance 13
Connectivity Framework Interface..... 25
Connectivity Framework Software Interface 35
DCN 16, 17
DCS 16
ERP 20
FILO 18
gateway 18
IIC 47
integratability 13
interchangeability 11
interface 12
interfaces 21, 22
interfaces, planned..... 34
interoperability 11, 13
JVM..... 46
Layer-F applications..... 19
Layer-F download/upload 24
Layer-F formats..... 24
Layer-F import/export 24
Layer-I applications 19
Layer-L applications 19
Layer-O applications..... 19
maintainability 13
modularity 11
MRP 20
OCF..... 16, 17, 27
OCI..... 16, 20
OT data center..... 20
physical interface 12
Platform I/O Physical Interface..... 36
Platform Services Interface 36
platform-dependent applications..... 37
platform-independent interfaces..... 31
PLC 16
PLM 20
portability..... 11
quality attributes..... 11
reliability 13
resilience 13
safety 13
scalability 13
SCM 20
security 13, 30
Security Management Interface 34
Security Services Interface..... 35
software interface 12
SWaP..... 36
System Management Interface 25
Technical Architecture 11
UML..... 22

Evaluation Copy

© 2021 The Open Group, All Rights Reserved
Evaluation Copy. Not for redistribution