The Open Group Preliminary Standard

O-PAS™ Standard, Version 2.1

Part 7 – Distributed Control Platform

Evaluation Copy

© 2021 The Open Group, All Rights Reserved
Evaluation Copy. Not for redistribution

Copyright © 2021, The Open Group

No part of this publication may be reproduced, stored in a retrieval system, or transmitted, in any form or by any means, electronic, mechanical, photocopying, recording or otherwise, without the prior permission of the copyright owners.

Any use of this publication for commercial purposes is subject to the terms of the Annual Commercial License relating to it. For further information, see www.opengroup.org/legal/licensing.

The Open Group Preliminary Standard

O-PAS™ Standard, Version 2.1: Part 7 – Distributed Control Platform

Document Number: P210-7

Published by The Open Group, May 2021.

Comments relating to the material contained in this document may be submitted to:

The Open Group, Apex Plaza, Forbury Road, Reading, Berkshire, RG1 1AX, United Kingdom

or by electronic mail to:

ogspecs@opengroup.org

Evaluation Copy

© 2021 The Open Group, All Rights Reserved
Evaluation Copy. Not for redistribution

Contents

1 Introduction 1
- 1.1 Objective 1
- 1.2 Overview 1
- 1.3 Conformance 1
- 1.4 Normative References 2
- 1.5 Terminology 2
- 1.6 Future Directions (Informative) 2

2 Terms and Definitions 3
- 2.1 OPAF Glossary and Abbreviations 3

3 Concept Overview and Scope 4
- 3.1 Scope 4
- 3.2 Prerequisites 4

4 Interfaces and Profiles 5
- 4.1 DCP Profiles 5

5 DCP Scope and Capabilities 6
- 5.1 General DCP Requirements 6
- 5.2 Network Connection 6
- 5.3 Clock Stability 6
- 5.4 Persistent Storage 6
- 5.5 Hardware Time Support 6

A Possible Future Extensions (Informative) 8
- A.1 Overview 8
- A.2 DCP Step 1: The Enclosure Options 12
- A.3 DCP Step 2: The Field Side Connections 14
- A.4 DCP Step 3: The Data Requirements between DCN and I/O Subsystem 15
  - A.4.1 Real-Time I/O Data 15
  - A.4.2 Alarm and Condition Messages 16
  - A.4.3 Configuration Data 16
  - A.4.4 Maintenance Data 16
  - A.4.5 Error Correcting Codes 16
  - A.4.6 Services Required 16
- A.5 DCP Step 4: The I/O Hardware (Bus, Connectors, Cards) 16
- A.6 DCP Step 5: The DCN 18

B Control System Configurations Centered on DCP and Execution Engines (Informative) 20
- B.1 Key to the Diagrams 20
- B.2 Design Assumptions 20
- B.3 DCN With Embedded I/O Feeding a DCN With No I/O 21
- B.4 DCN With Embedded I/O and Embedded Control 22

© 2021 The Open Group, All Rights Reserved
Evaluation Copy. Not for redistribution

B.5 DCN With Vendor-Specific External I/O Feeding a DCN With No I/O 23
B.6 DCN With Vendor-Specific External I/O and Embedded Control 24
B.7 DCN With O-PAS External I/O Feeding a DCN With No I/O 25
B.8 DCN With O-PAS External I/O and Embedded Control 26
B.9 DCN With O-PAS External I/O Feeding DCNs in Cascade 27
B.10 Highly Distributed Control Model 28

C Abbreviations 29

Evaluation Copy

© 2021 The Open Group, All Rights Reserved
Evaluation Copy. Not for redistribution

Preface

The Open Group

The Open Group is a global consortium that enables the achievement of business objectives through technology standards. Our diverse membership of more than 800 organizations includes customers, systems and solutions suppliers, tools vendors, integrators, academics, and consultants across multiple industries.

The mission of The Open Group is to drive the creation of Boundaryless Information Flow™ achieved by:

- Working with customers to capture, understand, and address current and emerging requirements, establish policies, and share best practices
- Working with suppliers, consortia, and standards bodies to develop consensus and facilitate interoperability, to evolve and integrate specifications and open source technologies
- Offering a comprehensive set of services to enhance the operational efficiency of consortia
- Developing and operating the industry's premier certification service and encouraging procurement of certified products

Further information on The Open Group is available at www.opengroup.org.

The Open Group publishes a wide range of technical documentation, most of which is focused on development of Standards and Guides, but which also includes white papers, technical studies, certification and testing documentation, and business titles. Full details and a catalog are available at www.opengroup.org/library.

This Document

This document is Part 7 of the O-PAS™ Standard, Version 2.1, a Preliminary Standard of The Open Group. It has been developed and approved by The Open Group.

The O-PAS Standard consists of the following 12 parts (of the anticipated 13 parts):

- O-PAS Part 1 – Technical Architecture Overview (Informative)
- O-PAS Part 2 – Security
- O-PAS Part 3 – Profiles (Informative)
- O-PAS Part 4 – O-PAS Connectivity Framework (OCF)
- O-PAS Part 5 – System Management
- O-PAS Part 6.1 – Information and Exchange Models: Overview and Interfaces

© 2021 The Open Group, All Rights Reserved
Evaluation Copy. Not for redistribution

- O-PAS Part 6.2 – Information and Exchange Models: Basic Configuration
- O-PAS Part 6.3 – Information and Exchange Models: Alarm and Events Configuration
- O-PAS Part 6.4 – Information and Exchange Models: Function Blocks
- O-PAS Part 6.5 – Information and Exchange Models: IEC 61499
- O-PAS Part 6.6 – Information and Exchange Models: IEC 61131
- O-PAS Part 7 – Distributed Control Platform (this document)

The parts listed above are separate documents that can be updated and re-versioned as required as we move forward with the O-PAS Standard.

The O-PAS Standard, Version 2.1 is being published initially as a Preliminary Standard since it addresses an emerging area of technology; therefore, it may change before being published as a full standard of The Open Group. In such a case it will be made as upwards-compatible as possible with the corresponding Preliminary Standard, but complete upwards-compatibility is not guaranteed.

Once this document becomes a full standard, it will supersede the O-PAS Standard, Version 1.0 published in December 2019.

Conventions

A Glossary and Abbreviations reference is available. If a term is not defined in that document then the common English definition, as defined in Merriam-Webster's Collegiate Dictionary, applies.

Evaluation Copy

© 2021 The Open Group, All Rights Reserved
Evaluation Copy. Not for redistribution

Trademarks

ArchiMate, DirecNet, Making Standards Work, Open O logo, Open O and Check Certification logo, Platform 3.0, The Open Group, TOGAF, UNIX, UNIXWARE, and the Open Brand X logo are registered trademarks and Boundaryless Information Flow, Build with Integrity Buy with Confidence, Commercial Aviation Reference Architecture, Dependability Through Assuredness, Digital Practitioner Body of Knowledge, DPBoK, EMMM, FACE, the FACE logo, FHIM Profile Builder, the FHIM logo, FPB, Future Airborne Capability Environment, IT4IT, the IT4IT logo, O-AA, O-DEF, O-HERA, O-PAS, Open Agile Architecture, Open FAIR, Open Footprint, Open Process Automation, Open Subsurface Data Universe, Open Trusted Technology Provider, OSDU, Sensor Integration Simplified, SOSA, and the SOSA logo are trademarks of The Open Group.

FOUNDATION is a trademark of the Fieldbus Foundation.

HART is a registered trademark of the HART Communication Foundation.

Linux is a registered trademark of Linus Torvalds in the US and other countries.

Microsoft is a registered trademark and Windows is a trademark of Microsoft Corporation in the United States and/or other countries.

All other brands, company, and product names are used for identification purposes only and may be trademarks that are the sole property of their respective owners.

Evaluation Copy

© 2021 The Open Group, All Rights Reserved
Evaluation Copy. Not for redistribution

Acknowledgements

The Open Group gratefully acknowledges the International Society of Automation for use of the ISA copyrighted ANSI/ISA 62443 series of standards. Visit www.isa.org.

The Open Group gratefully acknowledges the contribution of the following people in the development of this document:

Lead Contributors

- Karel Cerny – KjC PC Innovations
- Mark Carrier – Real-Time Innovations, Inc.
- Luis Duran – ABB Automation GmbH
- David Fort – Rockwell Automation
- Serdar Gueltekin – Intel Corporation
- Kirk Hansen – Enterprise Transformation Partners
- Nisha Jains – Intel Corporation (Subcommittee Lead)
- Alex Johnson – Schneider Electric (Subcommittee Lead)
- Jason Norris – Phoenix Contact

The Open Group gratefully acknowledges the contribution and leadership of the Co-Chairs of the Open Process Automation™ Forum and Working Groups.

Forum Co-Chairs

- Don Bartusiak – Collaborative Systems Integration, LLC
- Trevor Cusworth – Schneider Electric

Business Working Group Co-Chair

- Luis Duran – ABB Automation GmbH
- Jacco Opmeer – Shell

Enterprise Architecture Work Grouping Co-Chairs

- Dave Emerson – Yokogawa Electric Corporation
- Harirajan Padmanabhan – hpad, Inc.

Evaluation Copy

© 2021 The Open Group, All Rights Reserved
Evaluation Copy. Not for redistribution

Technology Working Group Co-Chairs

- David Fort – Rockwell Automation
- Kirk Smith – Intel Corporation

Certification Working Group Co-Chairs

- Ed Agis – Intel Corporation
- Ron Breault – Wind River Systems, Inc.

Evaluation Copy

© 2021 The Open Group, All Rights Reserved
Evaluation Copy. Not for redistribution

Referenced Documents

The following documents are referenced in Part 7 of the O-PAS Standard.

The documents are referred to in the text in such a way that some or all of their content constitutes requirements of this part. For dated references, only the version cited applies. For undated references, the latest version of the referenced document (including any amendments) applies.

(Please note that the links below are good at the time of writing but cannot be guaranteed for the future.)

Normative References

Normative references for Part 7 of the O-PAS Standard are defined in Section 1.4.

Informative References

None.

Evaluation Copy

© 2021 The Open Group, All Rights Reserved
Evaluation Copy. Not for redistribution

1 Introduction

1.1 Objective

The objective of Part 7 of the O-PAS Standard is to define the Distributed Control Platform (DCP) and the associated I/O subsystem required to support O-PAS conformant components.

Specifically, it describes the physical equipment used to embody control and I/O functionality.

This document does not cover other possible platforms; e.g., those based on standard workstations and servers.

The current version of Part 7 describes a limited subset of the total desired DCP scope. Future versions will cover more of that scope. The informative full vision of the targeted DCP standard is described in Appendix A, including material describing potential Units of Modularity (UoM) that the Open Process Automation™ Forum (OPAF) will consider.

1.2 Overview

The O-PAS Standard is focused on the minimum standards and specifications to meet the requirements of a federated process automation system using a secure, modular, open, interoperable, and interchangeable architecture. The standards are defined to allow development of systems composed of O-PAS conformant functional elements from multiple vendors.

Part 7 covers the DCP. The purpose of this document is to define the specifications of the physical equipment specifications for the physical embodiment of control and I/O services, including connection to the Control Network.

On the Control Network topic, the physical platform requirements derive from the Profiles specified in O-PAS Part 4 – O-PAS Connectivity Framework (OCF); see Section 5.2. Part 7 specifies only the first defined connector for the Control Network; see Section 5.3.

The control and I/O equipment characteristics will be expressed in successive revisions to this document. Our intent is to describe this equipment from the “outside in”; i.e., to specify the interfaces at the outer boundaries of the physical equipment and work our way to the internal interfaces and the final goal of fully interchangeable modules. This will require multiple revisions to this document. We refer to this concept as describing UoMs.

1.3 Conformance

For the purposes of Part 7 of the O-PAS Standard, the conformance requirements (marked with “CRQ” identifiers) are defined in Chapter 4 (Profiles) and Chapter 5 (specific common requirements that apply to all Profiles).

© 2021 The Open Group, All Rights Reserved
Evaluation Copy. Not for redistribution

1.4 Normative References

The following standards contain provisions which, through references in this document, constitute provisions of Part 7 of the O-PAS Standard. At the time of publication, the editions indicated were valid. All standards are subject to revision, and parties to agreements based on this document are encouraged to investigate the possibility of applying the most recent editions of the standards listed below.

- ANSI/ISA-62443-4-2:2018: Security for Industrial Automation and Control Systems – Part 4-2: Technical Security Requirements for IACS Components (adopted by IEC as IEC 62443-4-2)
- IEEE 1588-2008: IEEE Standard for a Precision Clock Synchronization Protocol for Networked Measurement and Control Systems; refer to: https://standards.ieee.org/standard/1588-2008.html
- IETF RFC 2119: Key Words for Use in RFCs to Indicate Requirement Levels, March 1997; refer to: https://tools.ietf.org/html/rfc2119
- O-PAS Standard, Version 2.1: Part 2 – Security, The Open Group Preliminary Standard (P210-2), May 2021, published by The Open Group; refer to: www.opengroup.org/library/p210
- O-PAS Standard, Version 2.1: Part 4 – O-PAS Connectivity Framework (OCF), The Open Group Preliminary Standard (P210-4), May 2021, published by The Open Group; refer to: www.opengroup.org/library/p210
- O-PAS Standard, Version 2.1: Part 5 – System Management, The Open Group Preliminary Standard (P210-5), May 2021, published by The Open Group; refer to: www.opengroup.org/library/p210

1.5 Terminology

The key words “shall”, “shall not”, and “should” are used in the O-PAS Standard as defined below. These definitions are taken from IETF RFC 2119.

Shall	Definition is an absolute requirement of the specification.
Shall not	Definition is an absolute prohibition of the specification.
Should	There may exist valid reasons in particular circumstances to ignore a particular item, but the full implications must be understood and carefully weighed before choosing a different course.

1.6 Future Directions (Informative)

A future version of the O-PAS Standard will address additional functionality such as common configuration information, portability of Layer I, L, and O applications, and interchangeable devices. At that time, Part 7 and its contents will be revised and updated accordingly.

Additionally, this document will be revised and updated as the various UoMs are explored and clarified. See Appendix A of this document for our current expectations.

© 2021 The Open Group, All Rights Reserved
Evaluation Copy. Not for redistribution

2 Terms and Definitions

For the purposes of the O-PAS Standard, the following terms and definitions apply. Merriam-Webster's Collegiate Dictionary should be referenced for terms not defined in this chapter. The OPAF Glossary and Abbreviations should be referenced for additional terms not defined in this chapter.

2.1 OPAF Glossary and Abbreviations

For the OPAF Glossary and Abbreviations, see the definitions at: www.opengroup.org/open-process-automation-forum/glossary.

Evaluation Copy

© 2021 The Open Group, All Rights Reserved
Evaluation Copy. Not for redistribution

3 Concept Overview and Scope

3.1 Scope

Given that the physical equipment must be interchangeable among the various O-PAS conformant offers and that the number of possible network services and physical layers is large, this document prunes the possibilities to a manageable few that cover most use-cases.

Part 7 is restricted to the various embedded DCP options. That is, it addresses those DCPs that are typified by no moving parts and an embedded Operating System (OS) supporting real-time algorithm execution. General-purpose computing platforms (e.g., workstations/servers and cloud platforms based on Microsoft® Windows™ or Linux®) are out of scope for Part 7.

3.2 Prerequisites

Part 7 assumes a working understanding of the terms in the Glossary and process control equipment generally.

Evaluation Copy

© 2021 The Open Group, All Rights Reserved
Evaluation Copy. Not for redistribution

4 Interfaces and Profiles

4.1 DCP Profiles

This document is focused on the hardware platform (DCP) and the interfaces that it presents to its users, as shown in Figure 1. A red, round cornered box with dashed lines indicates the DCP scope.

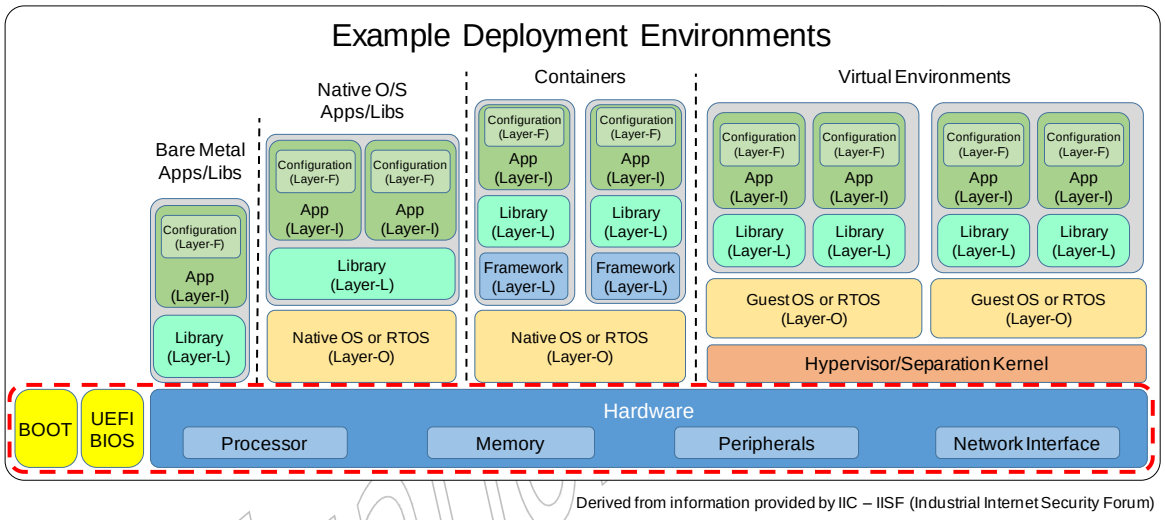

Figure 1: Example Deployment Environments for Applications (Dashed Box Surrounds the DCP)

The following table describes the DCP profile described by the O-PAS Standard.

Platform Profile	Abbreviation	Description
Distributed Control Platform	DCP-001	A compute platform for a Distributed Control Node (DCN).

A DCP may support zero or more I/O subsystems. I/O subsystems may be packaged within the DCP or external to the DCP.

Though an O-PAS I/O subsystem has not been defined, Appendix A (physical characteristics) illustrates the current expectations for an O-PAS I/O subsystem. It offers interested parties a look ahead. DCNs may also attach to non-conformant O-PAS I/O subsystems.

© 2021 The Open Group, All Rights Reserved
Evaluation Copy. Not for redistribution

5 DCP Scope and Capabilities

5.1 General DCP Requirements

DCPs have dependencies on requirements in other parts of the O-PAS Standard. Those parts contain requirements that imply hardware capabilities to implement specific profiles. To be specific:

- An O-PAS conformant DCP shall conform to the security requirements in the Security Facet SEC-F-001 described in O-PAS Part 2 – Security [CRQ-P7-001]
- An O-PAS conformant DCP shall comply with at least one of the network profiles from O-PAS Part 4 – O-PAS Connectivity Framework (OCF) [CRQ-P7-002]
- An O-PAS conformant DCP shall comply with the selected profile from O-PAS Part 5 – System Management related to reporting system management information [CRQ-P7-003]

5.2 Network Connection

An O-PAS conformant DCP shall support an RJ45 connector; *aka* 8P8C jack (FCC standard) with auto-negotiation from at least 100Mbps. [CRQ-P7-004]

5.3 Clock Stability

An O-PAS conformant DCP shall be capable of remaining within 0.5 milliseconds of the MTS under worst-case conditions for five (5) hours upon the loss of the MTS signal. [CRQ-P7-005]

For this requirement to be met, the MTS should not drift relative to actual time; i.e., it needs a reference such as GPS to hold it steady. [CRQ-P7-006]

5.4 Persistent Storage

An O-PAS conformant DCP shall provide permanent/non-volatile storage commensurate with the retention and restoration of installed software and configuration items after a power failure. [CRQ-P7-007]

An O-PAS conformant DCP shall not use a battery to provide this storage. [CRQ-P7-008]

5.5 Hardware Time Support

An O-PAS conformant DCP shall provide whatever hardware support is needed to meet the requirements of the network profile selected from those defined in O-PAS Part 4 – O-PAS Connectivity Framework (OCF). [CRQ-P7-009]

© 2021 The Open Group, All Rights Reserved
Evaluation Copy. Not for redistribution

Refer to Networking Profiles in O-PAS Part 4 – O-PAS Connectivity Framework (OCF) for the list of profiles.

Evaluation Copy

© 2021 The Open Group, All Rights Reserved
Evaluation Copy. Not for redistribution

A Possible Future Extensions (Informative)

The material in this appendix will be used to guide the creation of Part 7 of the O-PAS Standard, Version 3.0.

Our plan requires us to take what we want to achieve to the market and search for a vendor to create a reference implementation and document the interfaces.

Therefore, this document is incomplete in the sense that this version does not cover all aspects of what we want to achieve; rather, it serves as the basis for a hardware supplier to build a system whose interfaces we could adopt as the actual standard.

A.1 Overview

This document does not contain the details of a control and I/O platform; rather, it defines the critical characteristics of a control and I/O platform by decomposing the layers.

The desired control and I/O platform is decomposed into UoMs. We have defined five such UoMs.

In the following diagrams, we identify three modular pieces with four interfaces. The three pieces are:

- Compute
- I/O
- Terminal Assembly (TA) (I/O side + Field (Wiring) Side)

The four interfaces are:

- Control Network (“north” side of Compute)
- Data Format including protocol and connectors (“south” side of Compute to “north” side of I/O)
- Connector (“south” side of I/O and “north” side of TA)
- I/O (field) wiring (“south” side of TA)

Evaluation Copy

© 2021 The Open Group, All Rights Reserved
Evaluation Copy. Not for redistribution

The following is a typical representation used in Table 1:

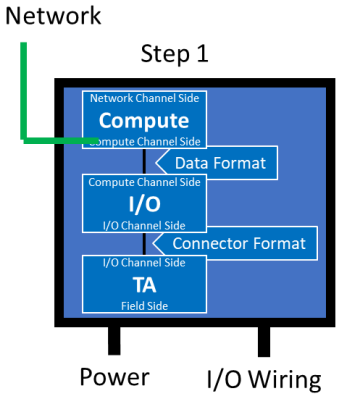

Our goal is for the O-PAS Standard to define interfaces where these pieces touch (two interfaces) and where they interact with the field devices and the Control Network. We expect to have profiles that allow O-PAS conformant devices to offer one or more of these interfaces; that is, not all conformant offers have the same modularity.

Packaging will determine the interfaces to be exposed.

It is assumed that the DCN software and its "north bound" connection (i.e., from DCP to the Control Network) will be 100% O-PAS conformant. It is the "south side" (i.e., the field-facing side) that offers the varying degrees of O-PAS mediated modularity.

Examples of acceptable DCN configurations include:

- DCN with no I/O
- DCN with proprietary I/O; *aka* DCN gateway
- DCN with I/O in same package with integral TA
- DCN with I/O in same package with remote TA
- DCN with remote I/O with directly attached field wires

Table 1 describes the general approach to modularity by dividing the work into five UoMs. Each UoM is presented as a step that can be taken to refine the physical platform. This is a proposed approach to analyzing the modularity, but the approach may not be reflected in the next version of O-PAS Part 7.

© 2021 The Open Group, All Rights Reserved
Evaluation Copy. Not for redistribution

Table 1: Modularity Approach

Unit of Modularity	Illustration and Scope of Hardware Profile	Discussion
1	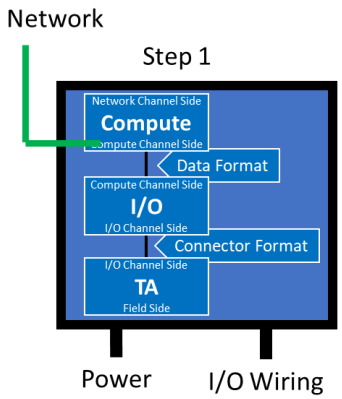 • Maximum Enclosure Size and I/O Capacity	**Step 1** specifies the package sizes that this document will specify for interchangeable enclosures. Package sizes will be specified to ensure that the module can be replaced without disturbing the rest of the system or significant rework. Logically, that means we define an enclosure and an I/O count for that size box. The UoM is the box and its contents; it is designed to be replaceable as a unit and not to require any knowledge of the contents. Power connectors, I/O wiring, and network connectors are the touch points and they are not standardized in Step 1. The I/O may be proprietary.
2	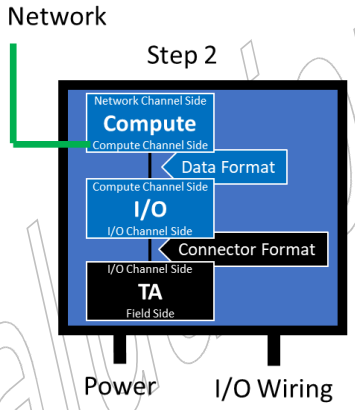 • Enclosure Size • Standard Wiring Block & Connector Format(s)	In **Step 2**, we standardize connection of the TA to I/O module. The UoM is that connection. O-PAS conformant systems – if they use TAs – will use the O-PAS TA. This step discusses the expectations placed on this connector and the TAs.

© 2021 The Open Group, All Rights Reserved
Evaluation Copy. Not for redistribution

Unit of Modularity	Illustration and Scope of Hardware Profile	Discussion
3	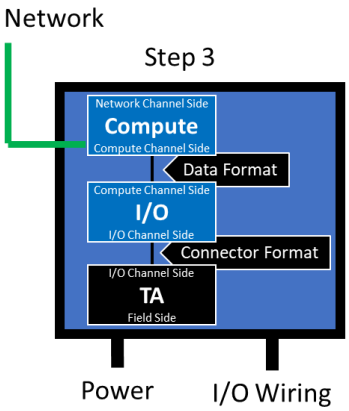 • Enclosure Size • Standard Wiring Block • I/O Data Format	In **Step 3**, we define the types of data that we expect to flow between the DCN and the I/O modules. Some of this data will flow through the I/O modules to the attached devices when protocols like HART® are used.
4	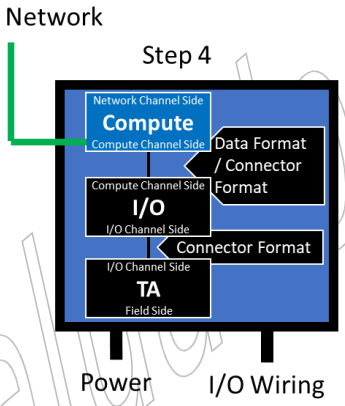 • Enclosure Size • Standard Wiring Block • I/O Data Format • I/O Hardware • I/O Bus • I/O Card	In **Step 4**, we define the characteristics that we expect of the I/O modules themselves, the I/O bus, and the connector between them and the DCN.

Evaluation Copy

© 2021 The Open Group, All Rights Reserved
Evaluation Copy. Not for redistribution

Unit of Modularity	Illustration and Scope of Hardware Profile	Discussion
5	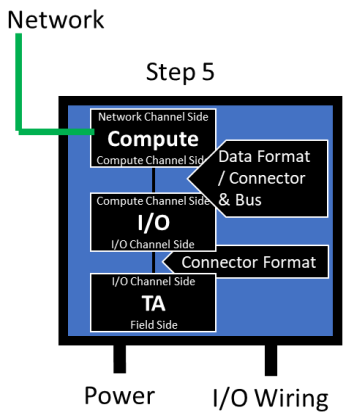 • Enclosure Level • Wiring Block • I/O Data Format • I/O Hardware • DCN	In **Step 5**, we explore the expectations for the DCN hardware.

A.2 DCP Step 1: The Enclosure Options

Step 1 standardizes the enclosure characteristics including size and I/O count for that size.

- Physical size of enclosure:
  - — Rack room:
    - — Front and rear access:
      - Max: 2000mm (h) x 800 (w) x 800 (d)
      - Target I/O count: 1500 Analog I/O w/o termination in enclosure; 750 w/termination
    - — Front only:
      - Max: 2000mm (h) x 800 (w) x 400 (d)
      - Target I/O count: 750 Analog I/O w/o term; 375 with termination
  - — Smart Junction Box (SJB):
    - — Front access only
    - — Option 1:
      - Max: 1200mm (h) x 800mm (w) x 300mm (d)
      - Target I/O count: 128 Analog I/O w/termination

© 2021 The Open Group, All Rights Reserved
Evaluation Copy. Not for redistribution

— Option 2:

- Max: 300mm (h) x 400mm (w) x 200mm (d)
- Target Count: 32 Analog I/O w/termination

— Standalone DCN:

— Max size: TBD (vendor to propose)

— Target I/O count: TBD (vendor to propose)

- Environmental:

— Enclosure:

— Ambient Temperature of the box (higher temp inside box)

- Rack room: 55 deg C to -20 deg C
- SJB: 65 deg C to -20 deg C outside the box with sunshade
- Standalone DCN: 55 deg C to -20 deg C

— Weather resistance: use IP standard; silent on rating; vendors will post what they offer

— Modules within the enclosure:

— Vibration: 7.5 m/s2 (0.75 g) from 5 to 500 Hz

— Humidity (0-95% non-condensing)

— Corrosion (ANSI/ISA-71.04-2013)

— Hazardous area: ATEX[1] will be the standard cert.; vendors may offer NEC, but the O-PAS Standard does not require that

- Power:

— Incoming voltages:

— Rack room/SJB/DCN – 100-250 VAC @ 50/60 Hz; 24VDC

— Power wiring – 3.31 sq. mm/#12 AWG

— Single and/or dual feeds

- Control network connections:

— See Section 4.1

[1] Refer to https://en.wikipedia.org/wiki/ATEX_directive.

© 2021 The Open Group, All Rights Reserved
Evaluation Copy. Not for redistribution

A.3 DCP Step 2: The Field Side Connections

In this section we assume the standard enclosures from Section A.2 and build upon them.

In our work we observed the following:

- # of termination points per I/O-Channel (normal use):
  - — Seen today: 2-wire, 3-wire, 4-wire
  - — All go to the I/O card
    - — Signals may be conditioned in TA (i.e., T/C) so long as a “straight-through/pass-through” option is available as well
  - — Output maintenance during I/O-Channel change out:
    - — 2-connectors
    - — Neither goes to the I/O-Channel directly
- Need to land shield

We drew the following conclusions from these observations:

- We expect the field side of the TA to provide on a per I/O-Channel basis:
  - — Two (2) signal landing spots including power; e.g., 4-20mA
  - — Two (2) power landing spots (RTDs)
  - — Two (2) output signals landing spots
  - — T/C support (may require dedicated TA with embedded cold junction compensation)
  - — Shield landing
- We expect the electronic side of the TA to provide per I/O-Channel:
  - — Four (4) wires: 2 signal and maybe 2 power

An acceptable TA solution would meet the following:

- Standardize the connector from TA to the I/O-Channel to eliminate rewiring when I/O-Channel is replaced
- Provide options for the number of I/O-Channels per connector; e.g., 1, 2, 4, 8, 16
- Provide for four (4) wires per I/O-Channel as described above
- Allocate the minimum acceptable spacing between I/O-Channels based on ease of installation and support for both intrinsically safe and non-intrinsically safe solutions

  It is understood that this could result in two different TA families, but we would prefer just one solution if that is possible.
- Support the passing of HART signals to the I/O card; i.e., the proper electrical characteristics for HART

© 2021 The Open Group, All Rights Reserved
Evaluation Copy. Not for redistribution

An additional decision was made. It appears that NAMUR[2] is driving towards two (2) terminations per I/O-Channel only; i.e., no 3-wire or 4-wire terminations. While this is a desirable situation, we decided to retain the concept of 3-wire and 4-wire terminations because the O-PAS Standard is supposed to support existing installed field equipment and that equipment requires the older approach.

It is reasonable to offer another TA profile for 2-wire NAMUR applications if we so desire, but it is not called out at the time of writing.

A.4 DCP Step 3: The Data Requirements between DCN and I/O Subsystem

This step of our modular approach specifies the functionality that is required between the DCN and its I/O subsystem.

We state that the DCN/I/O interface will support the following data transfers:

- Real-time I/O values
- Alarm messages
- Configuration data
- Maintenance and diagnostic data

A.4.1 Real-Time I/O Data

Real-time I/O types include:

- Traditional:
  - — Analog: 4-20mA (+HART), Thermocouples (T/C), Resistance Temperature Detector (RTD), Pulse
  - — Discrete: Discrete Input (DI), Discrete Output (DO), various voltages and currents
- Digital – industry physical layer and industry protocol:
  - — DeviceNet, Profibus DP, FOUNDATION™ Fieldbus (FF) H1
- Intelligent I/O:
  - — IT physical layer with industry protocol
  - — Examples:
    - — Ethernet physical layer with one or more of the following: OPC, Modbus TCP, Ethernet/IP, etc.
    - — RS-232 family running things like Modbus RTU[3]

It is expected that the values returned from the I/O subsystem will consist of an atomic unit. That unit will be:

[2] Refer to www.namur.net.
[3] Refer to www.modbus.org.

© 2021 The Open Group, All Rights Reserved
Evaluation Copy. Not for redistribution

- Value
- Time tag
- Quality bits (packed Boolean)

Values are expected to be in common and appropriate data types. Examples include float, double, integers of various lengths (8, 16, 32, 64 bits), Boolean, packed Booleans of various lengths matching the integer lengths.

It is expected that the time tag will be applied as close to the process as possible. In some cases, this means that the time tag will be preserved from the field device all the way to the final consumer of the data.

The quality bits need to be decided upon, but OPC has one set that has a reasonable definition.

A.4.2 Alarm and Condition Messages

Intelligent modules could generate process alarm messages and certainly could report conditions; e.g., sequence of events.

A.4.3 Configuration Data

Configuration data consists of information that could be used at the DCN level, the I/O module level, and/or the field device level. The service will support both downloading configurations and uploading configurations.

A.4.4 Maintenance Data

Maintenance data including firmware updates at the DCN, I/O module, and field device level is required. This is two-way communication since some devices will store their maintenance data in recoverable format.

A.4.5 Error Correcting Codes

The messages sent among the devices must be highly available. Typically, this is achieved through the use of error correcting codes and checksums.

A.4.6 Services Required

Both configuration data and maintenance data require a pass-through mechanism/service that allows the user to send blocks of data to targeted modules. Commonly encountered field devices that require such a service include HART and FF devices.

A.5 DCP Step 4: The I/O Hardware (Bus, Connectors, Cards)

This step talks about the needed functionality of the I/O bus and the I/O modules. Again, we are not specifying a design, but the basic requirements that a design will meet.

- I/O bus characteristics:

  — High speed:

© 2021 The Open Group, All Rights Reserved
Evaluation Copy. Not for redistribution

— A few megabits per second (minimum)

— High availability option:

— 10^3 times the value of a standard availability solution

— Low latency:

— TBD

— Low cost:

— Cost of I/O module itself; that is, it should be cheap to attach I/O modules

— Time sync-aware:

— Accurate enough to support 1ms Sequence of Events (SOE); i.e., +/- 0.5 ms from MTS

— Long-lived manufacturability:

— 30+ years under the control of the I/O vendors

— For example, IEEE 1118/RS-485 or other available as FPGA library

— Handle complex data:

— As defined in Section A.4

- Field mounted I/O support:

  — Use same technology as Control Network (DCN as I/O server)

- I/O bus connector:

  — Small, inexpensive, environmentally suitable (vibration, corrosion, heat, etc.)

  — 300 insertions (minimum)

- I/O modules:

  — Minimum I/O module profiles:

  — Universal:

  - Minimum: AI (+HART), AO (+HART), DI, DO, Pulse, NAMUR contact
  - Loop powered
  - Software configured for most types

  — Universal discrete I/O module:

  - Supports I/O-Channels that can be an input or an output
  - Various currents and voltages
  - Loop powered + external
  - Software configured for most types

© 2021 The Open Group, All Rights Reserved
Evaluation Copy. Not for redistribution

— Universal temperature module:

- Supports I/O-Channels that can be either a T/C or RTD input
- Software configured

— High availability option if not single signal

— Signal conditioning:

— Intrinsic safety option

— Anti-aliasing

— De-bouncing

— On-board conditioning allowed, but “pass-through” setting required if TA-based conditioning is used

— Internal clock suitable for 1ms SOE; i.e., +/- 0.5ms from MTS

— Replaceable under power

- Environmental:

  — Same as given in Section A.2

- Isolation:

  — I/O-Channel isolated:

  — 600 V for 1-minute I/O-Channel to I/O-Channel

  — 600 V for 1-minute I/O-Channel to ground

  — Group isolated:

  — 600 V to ground for 1 minute

  — Group size 8 or fewer

A.6 DCP Step 5: The DCN

The final step is the DCN definition.

- Size:
  As defined in Section A.2. We want a modular size analogous to the “U” measure used by servers so that we can have “double wide” DCNs.

- Network side:

  — Connections – as described in Section 4.1

- Field side:

  — Optional I/O capability – as described in Section A.5 and Section 4.1 for DCN type 1:

  — I/O count: 1, 2, 4, 8, 16

© 2021 The Open Group, All Rights Reserved
Evaluation Copy. Not for redistribution

— Optional gateway capability – as described in Section A.5 and Section 4.1 for DCN types 2 and 3:

— Cu Ethernet

— RS-232/485/422 all allowed

- Additional hardware requirements derived from earlier decisions:

— Support for IEEE 1588-2008 (eventually TSN)

— Support for ANSI/ISA-62443-4-2 SL2 implies TPM chip or equivalent

— BMC chip on either the Control Network or on an optional additional Ethernet connection if desired

- Replaceable under power
- Permanent storage:

— Enough non-volatile storage to retain the entire execution state for reboot

Evaluation Copy

© 2021 The Open Group, All Rights Reserved
Evaluation Copy. Not for redistribution

B Control System Configurations Centered on DCP and Execution Engines (Informative)

B.1 Key to the Diagrams

Color Key

- Red Arrows – O-PAS Standard-defined data transfer using mechanism not defined by the O-PAS Standard
- Black Arrows – Undefined data transfer using mechanism not defined by the O-PAS Standard
- Gold/Orange Arrows – To be defined in the O-PAS Standard
- Red Box with White Fill – O-PAS Standard-defined software
- Red Box with Light Gray Fill – Hardware defined by the O-PAS Standard
- Black Box with White Fill – Undefined by the O-PAS Standard
- Black Box with Dark Gray Fill – Software undefined by the O-PAS Standard
- Gold/Orange Box with Light Gray Fill – Hardware to be defined by the O-PAS Standard
- Gold/Orange Box with Light Blue Fill – To-be-defined O-PAS I/O bus and protocols
- Black Box with Very Dark Gray Fill – Hardware out of scope of the O-PAS Standard
- Black Box with Olive Drab Fill – Field device out of scope of the O-PAS Standard
- Black Line with a Bubble – The discovery and pass-through services
- Black Arrow with Filled Black Circle with Blue Double-ended Arrow – HART communication link (physical in black; communication in blue)

B.2 Design Assumptions

In the following diagrams, the following assumptions apply:

- The vendor-specific I/O service makes each of its input values available as an OPC UA Signal using a configured OPC UA Alias for each input
- The vendor-specific I/O service makes each of its output values available as an OPC UA Signal using a configured OPC UA Alias for each output
- The OCFB_In finds its input by using its configured O-PAS Signal Alias or allow manual changes via OPC UA if not configured to a specific Alias
- The OCFB_Out makes its value available to OPC UA as an O-PAS Signal using the configured Alias

A vendor-specific I/O subsystem and the vendor side of the OCFBs may optimize operations such that a search of the outside world is not required if the Alias is local.

© 2021 The Open Group, All Rights Reserved
Evaluation Copy. Not for redistribution

B.3 DCN With Embedded I/O Feeding a DCN With No I/O

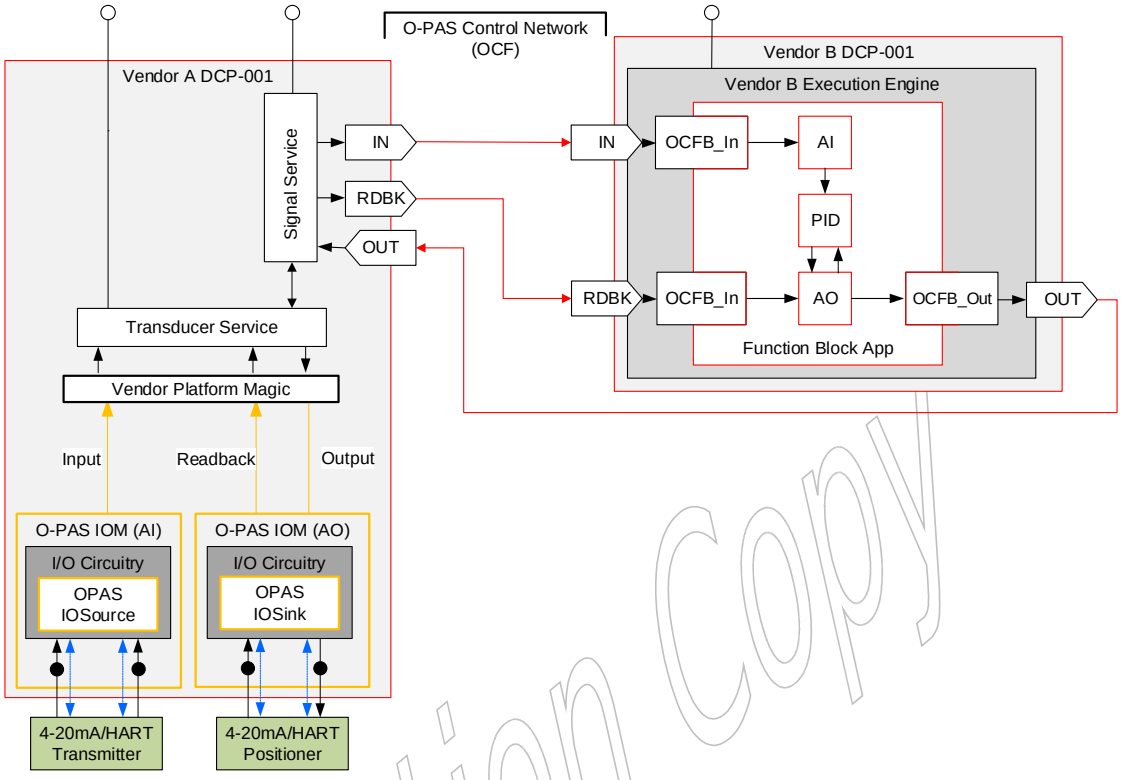

Evaluation Copy

© 2021 The Open Group, All Rights Reserved
Evaluation Copy. Not for redistribution

B.4 DCN With Embedded I/O and Embedded Control

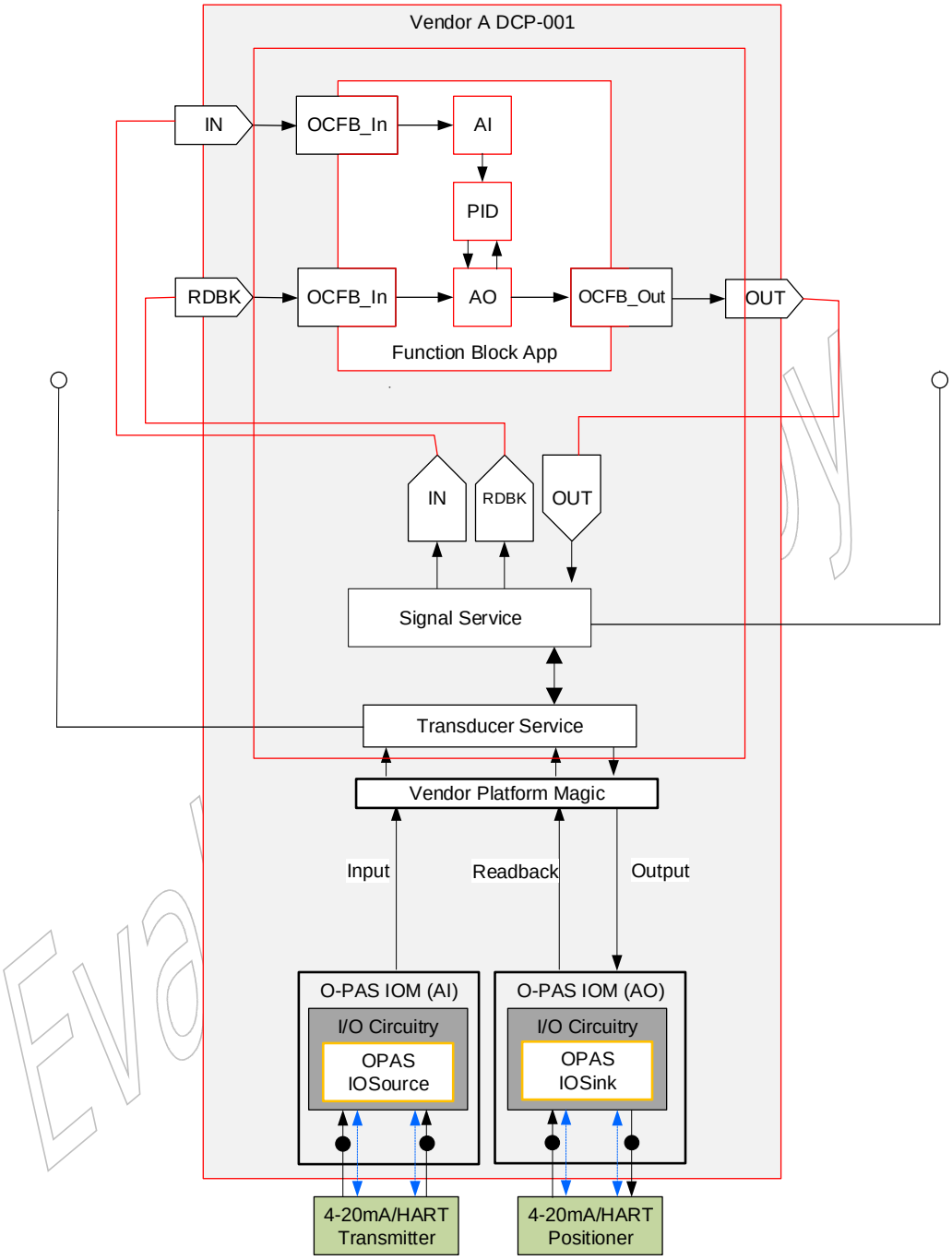

© 2021 The Open Group, All Rights Reserved
Evaluation Copy. Not for redistribution

B.5 DCN With Vendor-Specific External I/O Feeding a DCN With No I/O

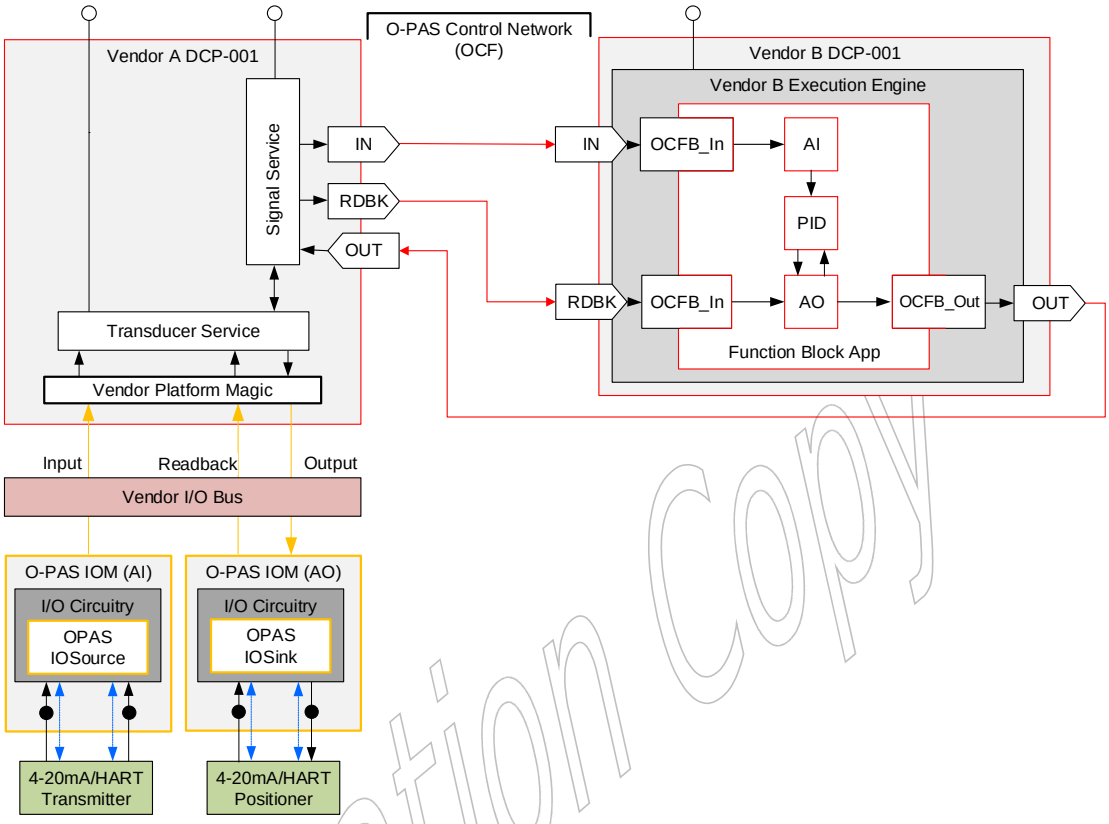

Evaluation Copy

© 2021 The Open Group, All Rights Reserved
Evaluation Copy. Not for redistribution

B.6 DCN With Vendor-Specific External I/O and Embedded Control

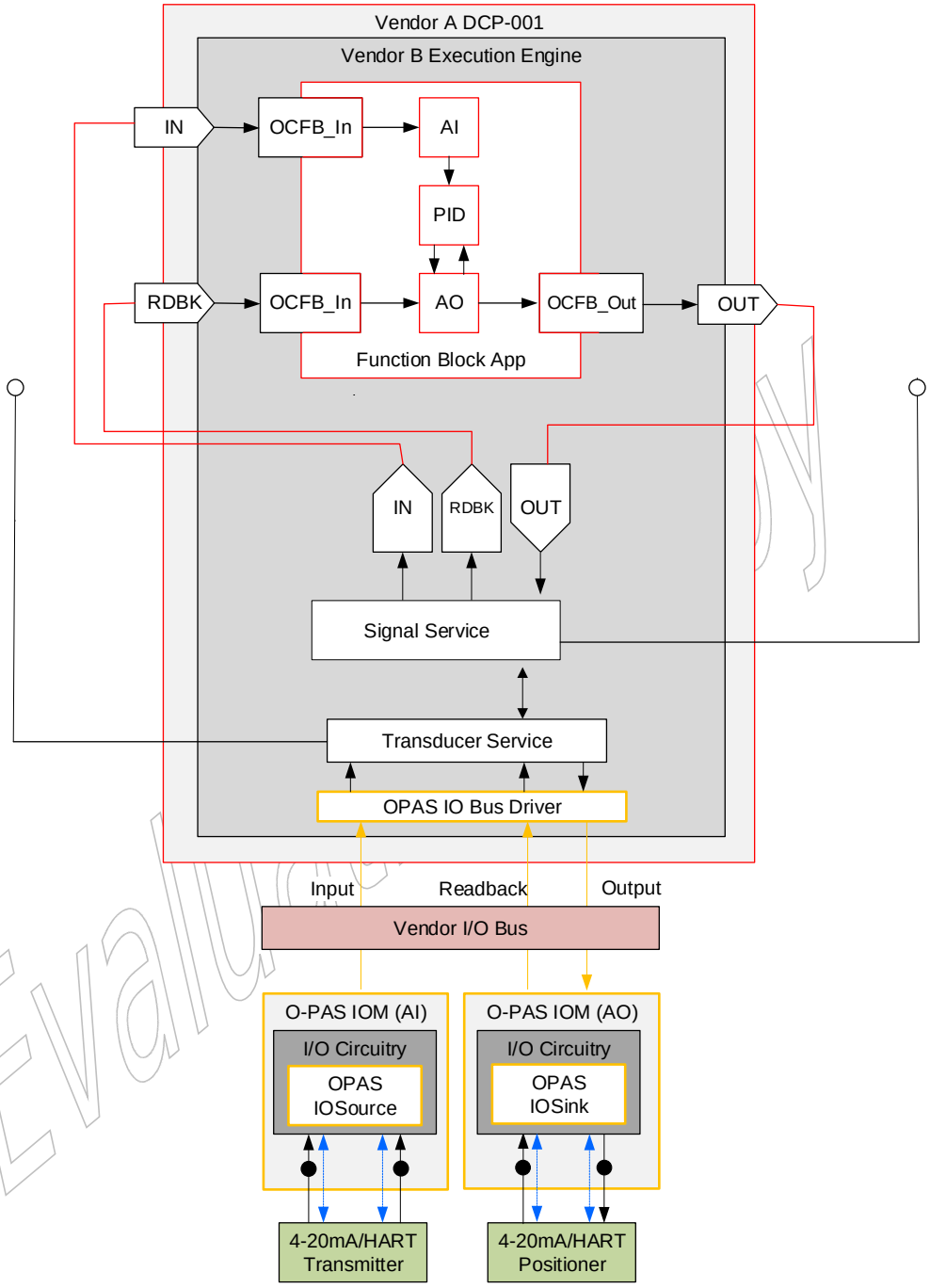

© 2021 The Open Group, All Rights Reserved
Evaluation Copy. Not for redistribution

B.7 DCN With O-PAS External I/O Feeding a DCN With No I/O

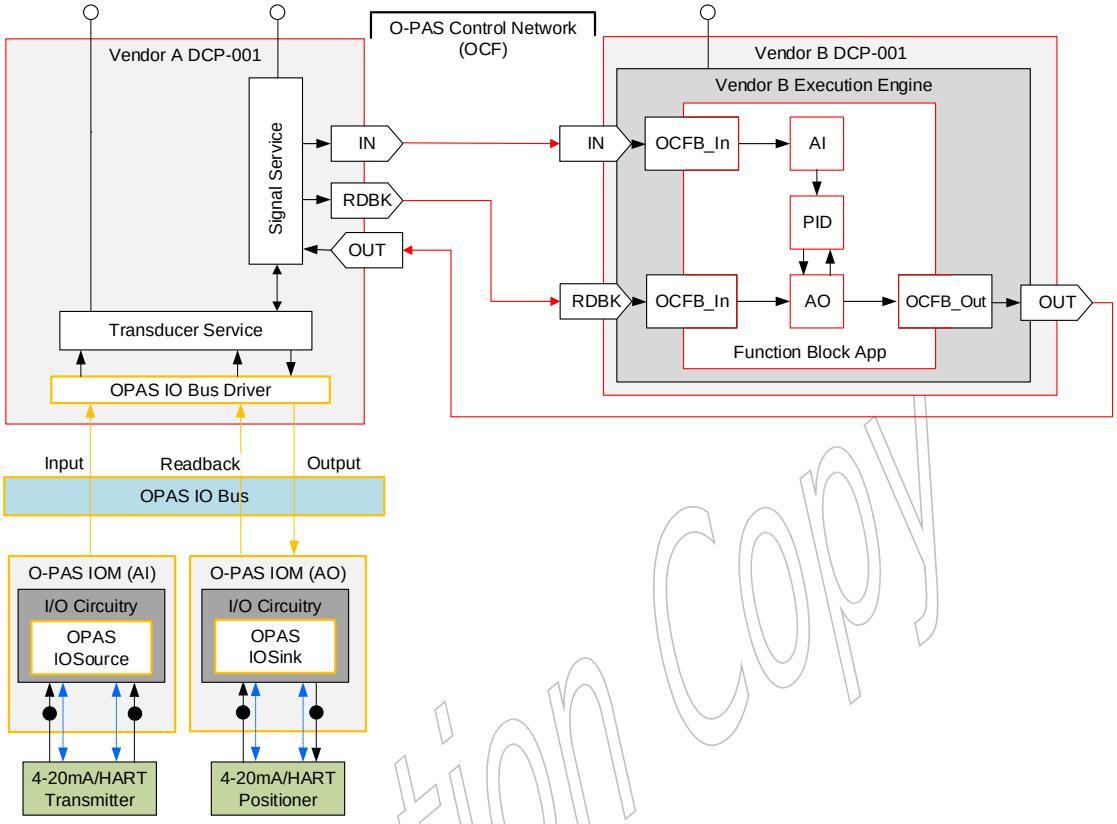

Evaluation Copy

© 2021 The Open Group, All Rights Reserved
Evaluation Copy. Not for redistribution

B.8 DCN With O-PAS External I/O and Embedded Control

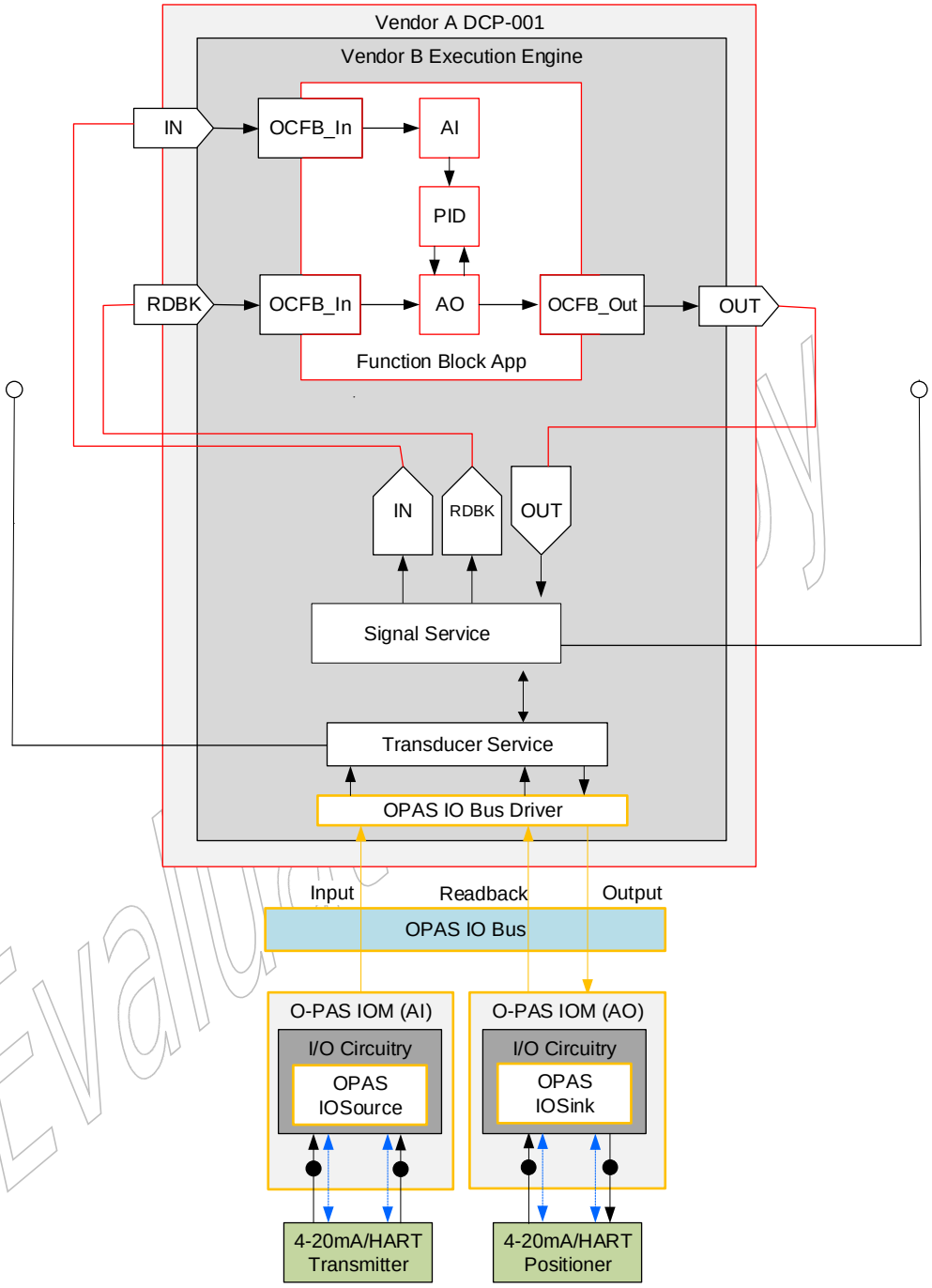

© 2021 The Open Group, All Rights Reserved
Evaluation Copy. Not for redistribution

B.9 DCN With O-PAS External I/O Feeding DCNs in Cascade

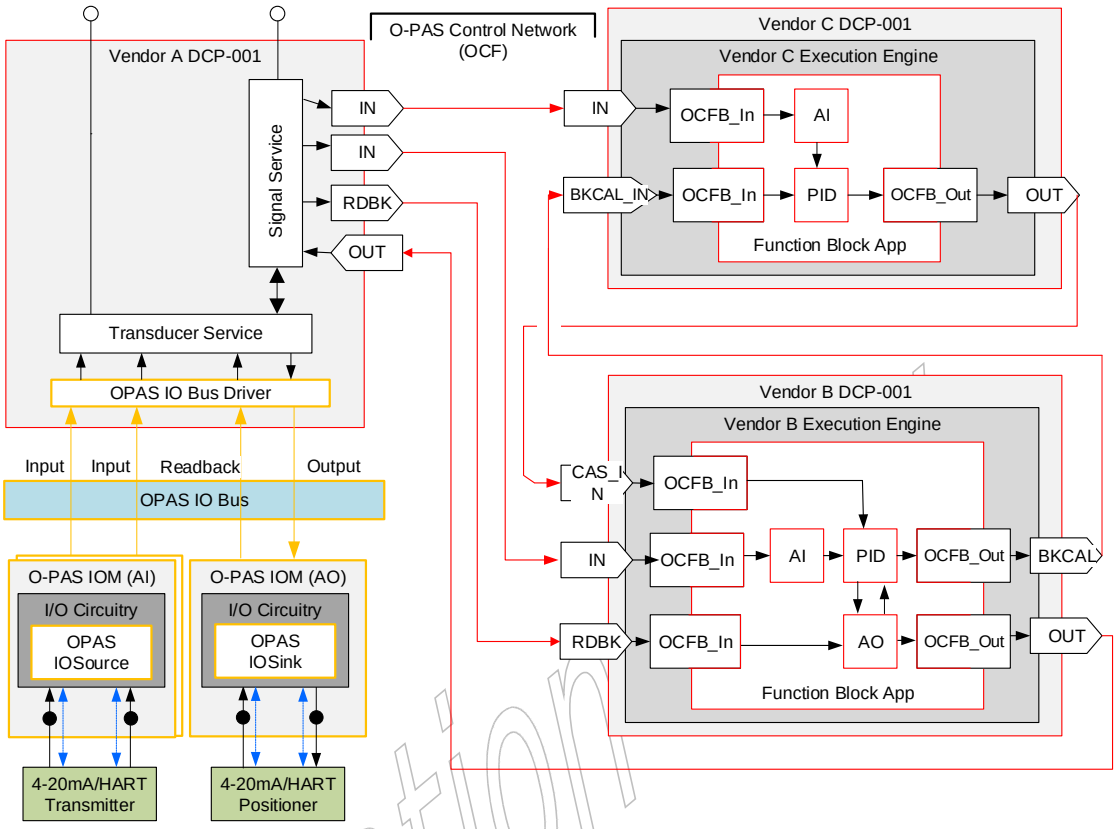

Evaluation

© 2021 The Open Group, All Rights Reserved
Evaluation Copy. Not for redistribution

B.10 Highly Distributed Control Model

In the following example, note that there is a mix of vendor hardware and software as well as a very distributed control loop.

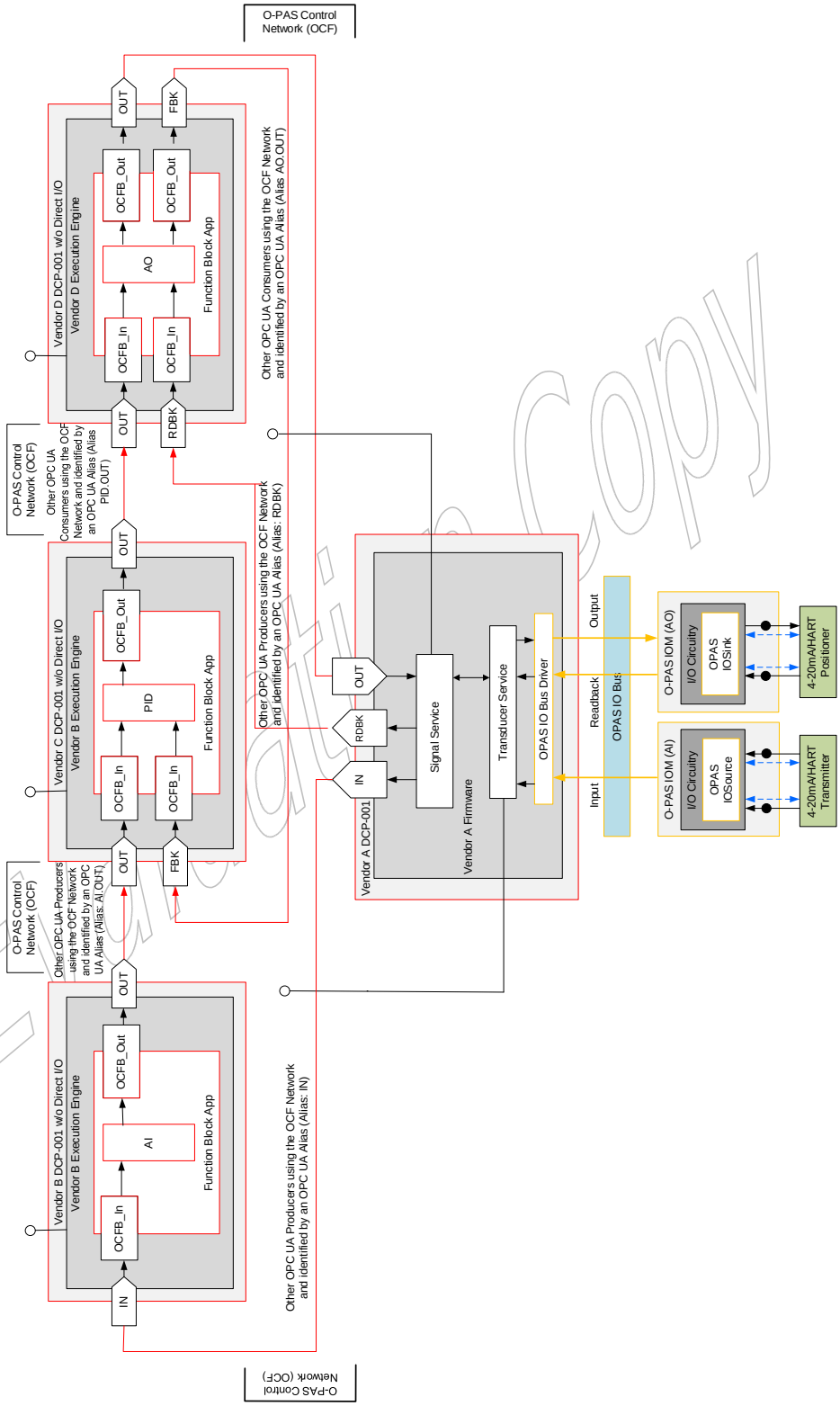

© 2021 The Open Group, All Rights Reserved
Evaluation Copy. Not for redistribution

C Abbreviations

For the OPAF Glossary and Abbreviations, see the definitions at: www.opengroup.org/open-process-automation-forum/glossary.

Evaluation Copy

© 2021 The Open Group, All Rights Reserved
Evaluation Copy. Not for redistribution

Index

ANSI/ISA-62443-4-2:2018 10
conformance 9
Control Network 9
DCN 13
DCN configurations 17
DCP 9, 12, 13
DCP profile 13
DCP requirements 14
DCP-001 13
FF 24
HART 22, 24
I/O subsystem 13
IEEE 1588-2008 10
OPAF 9
physical equipment 12
SEC-F-001 14
SJB 20
SOE 25
UoM 9, 17

Evaluation Copy

© 2021 The Open Group, All Rights Reserved
Evaluation Copy. Not for redistribution