BRAND: ELVARA	**DESIGNER:** STELLA DARROUX	**DESCRIPTION:** DRAPPED TOP
SEASON: SS25	**DATE:** 28/10/2025	**MAIN FABRIC:** TRIACETATE/POLYESTER
STYLE NAME: TOP 2504	**STYLE#:** 2504	**SIZE RANGE & [SAMPLE SIZE]:** XS S [M] L XL

SKETCH

FRONT

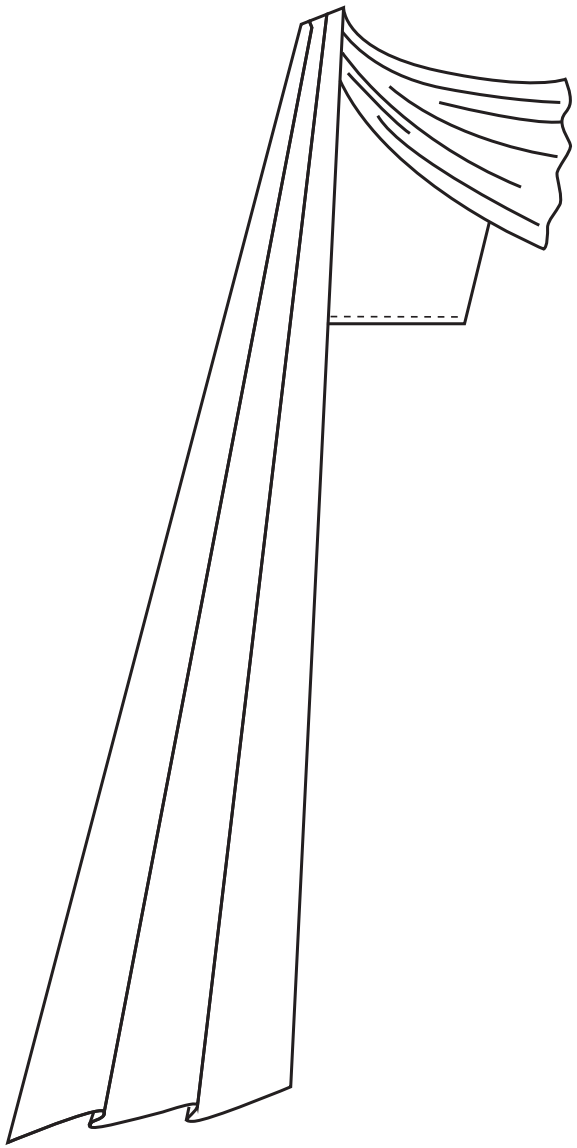

BACK

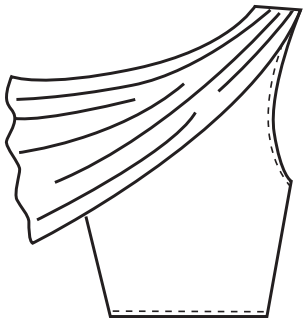

BRAND: ELVARA	**DESIGNER:** STELLA DARROUX	**DESCRIPTION:** DRAPPED TOP
SEASON: SS25	**DATE:** 28/10/2025	**MAIN FABRIC:** TRIACETATE/POLYESTER
STYLE NAME: TOP 2504	**STYLE#:** 2504	**SIZE RANGE & [SAMPLE SIZE]:** XS S [M] L XL

FABRICS

ITEM	IMAGE	DESCRIPTION	COLOR	CODE	QTY	SUPPLIER
MAIN FABRIC		LIGHTWEIGHT SILK CHARMEUSE COMPOSITION: 77% TRIACETATE/ 23% POLYESTER	SEE COLORWAY PAGE	TBC	TBC	JOEL AND SONS

TRIMMINGS

ITEM	IMAGE	DESCRIPTION	COLOR	CODE	QTY	SUPPLIER
INVISIBLE ZIPPER		INVISIBLE NYLON ZIPPER	MATCH TO FABRIC	TBC	1	TBC
SEWING THREAD		100% POLYESTER	MATCH TO FABRICS	TBC	1	TBC

BRAND: ELVARA	**DESIGNER:** STELLA DARROUX	**DESCRIPTION:** DRAPPED TOP
SEASON: SS25	**DATE:** 28/10/2025	**MAIN FABRIC:** TRIACETATE/POLYESTER
STYLE NAME: TOP 2504	**STYLE#:** 2504	**SIZE RANGE & [SAMPLE SIZE]:** XS S [M] L XL

LABELS

ITEM	IMAGE	COMPOSITION	COLOR	CODE	QTY	SUPPLIER
BRAND LABEL		WOVEN LABEL, 100% COTTON 15 X 65MM	WHITE	TBC	1	TBC
SIZE PIP	M	WOVEN LABEL, 100% COTTON TWILL 1/2” W X 1/2” H [FOLDED]	WHITE	TBC	1	TBC
CARE LABEL	77% TRIACETATE/ 23% POLYESTER DO NOT MACHINE WASH DO NOT BLEACH DO NOT IRON DRY CLEAN ONLY DO NOT TUMBLE DRY PROFESSIONAL DRY CLEAN ONLY MADE IN [COUNTRY]	WOVEN LABEL, 100% COTTON TWILL, THERMAL PRINT USE IN STOCK / AVAILABLE SIZE	WHITE	TBC	1	TBC

TECHPACK **GARMENT SPEC**

BRAND: ELVARA	**DESIGNER:** STELLA DARROUX	**DESCRIPTION:** DRAPPED TOP
SEASON: SS25	**DATE:** 28/10/2025	**MAIN FABRIC:** TRIACETATE/POLYESTER
STYLE NAME: TOP 2504	**STYLE#:** 2504	**SIZE RANGE & [SAMPLE SIZE]:** XS S [M] L XL

FRONT

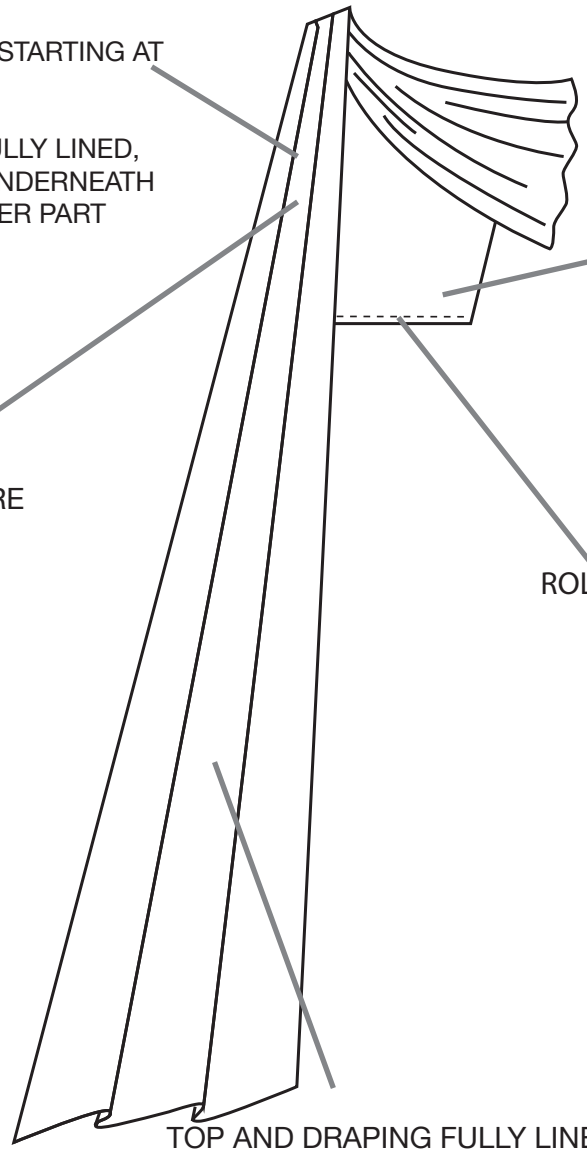

BACK

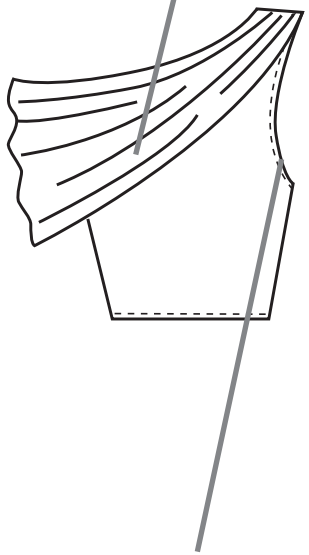

TOP FULLY LINED IN THE SAME FABRIC

TECHPACK **CONSTRUCTION SHEET**

BRAND: ELVARA	**DESIGNER:** STELLA DARROUX	**DESCRIPTION:** DRAPPED TOP
SEASON: SS25	**DATE:** 28/10/2025	**MAIN FABRIC:** TRIACETATE/POLYESTER
STYLE NAME: TOP 2504	**STYLE#:** 2504	**SIZE RANGE & [SAMPLE SIZE]:** XS S [M] L XL

FRONT

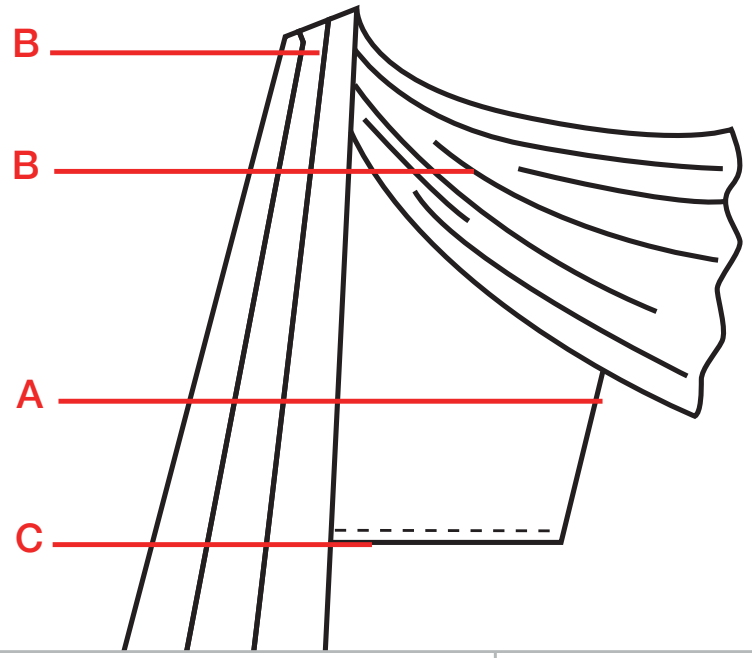

BACK

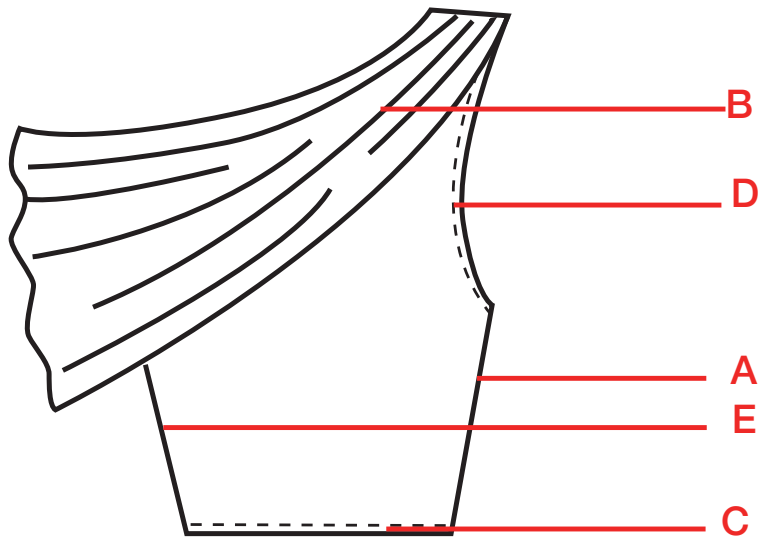

#	OPERATION	STITCHES	WIDTH	SPI	SEAMS	S/A
A	PANEL SEAMS	301	10MM	0		10
B	DRAPPING	301	NA	0	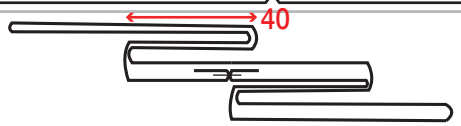	NA
C	HEM FINISH	301	1MM	0	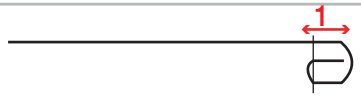	2
D	ARMHOLE SEAM	301	NA	0	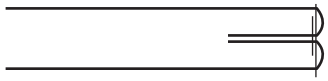	NA
E	INVISIBLE ZIPPER	301	10MM	0		10

BRAND: ELVARA	**DESIGNER:** STELLA DARROUX	**DESCRIPTION:** DRAPPED TOP
SEASON: SS25	**DATE:** 28/10/2025	**MAIN FABRIC:** TRIACETATE/POLYESTER
STYLE NAME: TOP 2504	**STYLE#:** 2504	**SIZE RANGE & [SAMPLE SIZE]:** XS S [M] L XL

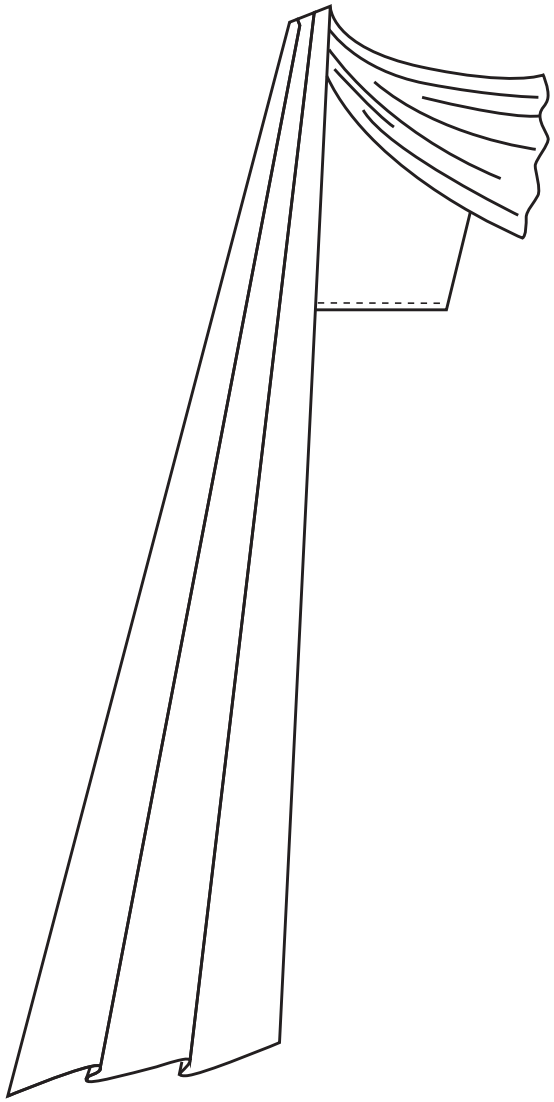

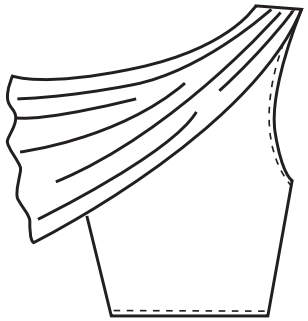

COLORWAY

MAIN FABRIC 1
WHITE
#FFFFFF
PANTONE WHITE

BRAND: ELVARA	**DESIGNER:** STELLA DARROUX	**DESCRIPTION:** DRAPPED TOP
SEASON: SS25	**DATE:** 28/10/2025	**MAIN FABRIC:** TRIACETATE/POLYESTER
STYLE NAME: TOP 2504	**STYLE#:** 2504	**SIZE RANGE & [SAMPLE SIZE]:** XS S [M] L XL

BRAND LABEL

TEXT DIMENSIONS: 15 X 65 MM (FINISHED)
POSITION: BELOW THE NECKLINE AT CENTER BACK
STITCHING: TOPSTITCHED ON THE LINING
PRINTING TECHNIQUE: WOVEN

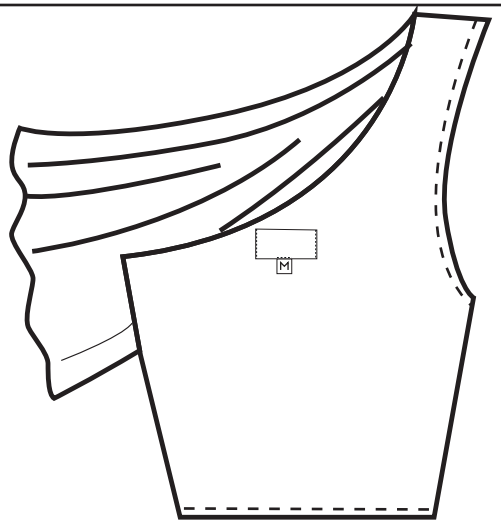

GARMENT SKETCH

SIZE PIP

TEXT DIMENSIONS: 1/2” WIDTH X 1/2” HEIGHT
TEXT DIMENSIONS: BELOW THE BRAND LABEL-CENTERED
STITCHING: SEWN AT THE TOP, FOLDED
TEXT COLOR: BLACK

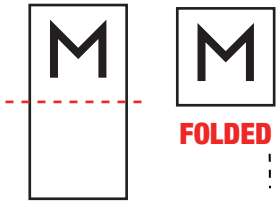

CARE LABEL

LABEL DIMENSIONS: 35 X 50MM
POSITION: RIGHT SIDE, INSERTED IN LINING SIDE SEAM, 5CM ABOVE HEM
STITCHING: INSERTED IN THE LINING SIDE SEAM
TEXT COLOR: BLACK

PLEASE INCLUDE:
-SIZE
-FABRIC COMPOSITION
-WASH INSTRUCTIONS
-COUNTRY OF ORIGIN
-BRAND NAME

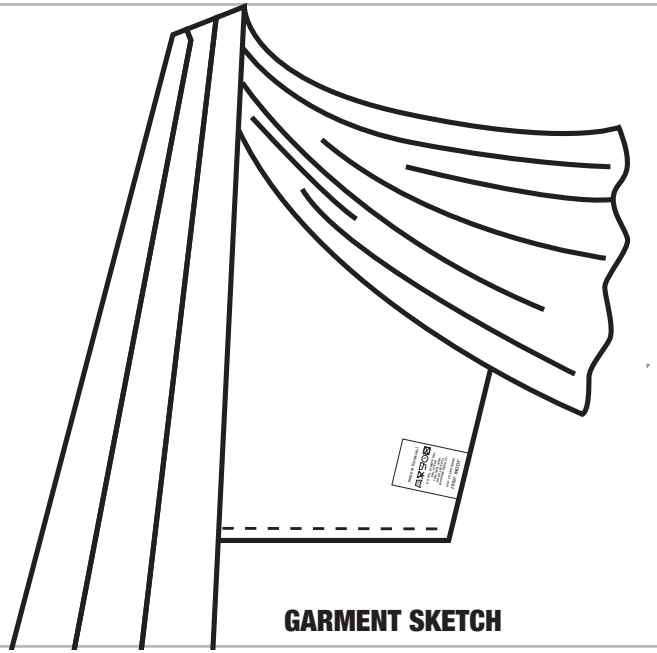

GARMENT SKETCH

PLEASE ADJUST GAPHIC SIZE AND USE AI FILES FOR THE ACTUAL ARTWORK/ GRAPHICS. LOGO SHOWN ARE NOT THE ACTUAL SIZE.

TECHPACK **SHIRT MEASURMENT SPECIFICATION**

BRAND: ELVARA **DESIGNER:** STELLA DARROUX **DESCRIPTION:** DRAPPED TOP

SEASON: SS25 **DATE:** 28/10/2025 **MAIN FABRIC:** TRIACETATE/POLYESTER

STYLE NAME: TOP 2504 **STYLE#:** 2504 **SIZE RANGE & [SAMPLE SIZE]:** XS S [M] L XL

#	MEASUREMENT	XS	S	M	L	XL	TOL +/-
A	TOP LENGTH FROM HSP TO BOTTOM	33	34	35	36	37	+/- 1
B	BUST WIDTH	84	88	92	96	100	+/- 1
C	DRAPING FALL LENGTH SHOULDER TO BOTTOM	100	101	102	103	104	+/- 0.5
D	BOTTOM LENGTH	70	74	78	82	86	+/- 1
E	DRAPPING TOTAL LENGTH (INCLUDE SHOULDER AND FALL)	200	205	210	215	220	+/- 1
F	SIDE SEAM	13	13.5	14	14.5	15	+/- 0.5
G	DRAPING SHOULDER LENGTH	25	26	27	28	29	+/- 0.5
H	DRAPING BOTTOM LENGTH	25	26	27	28	29	+/- 1

ALL MEASUREMENTS ARE IN CM - IT IS RECOMMENDED THT ALL SIZES ARE SIMPLED BEFORE PRODUCTION. MEASUREMENTS CAN BE ADJUSTED ACCORDING TO FACTORY

BRAND: ELVARA	**DESIGNER:** STELLA DARROUX	**DESCRIPTION:** DRAPPED TOP
SEASON: SS25	**DATE:** 28/10/2025	**MAIN FABRIC:** TRIACETATE/POLYESTER
STYLE NAME: TOP 2504	**STYLE#:** 2504	**SIZE RANGE & [SAMPLE SIZE]:** XS S [M] L XL

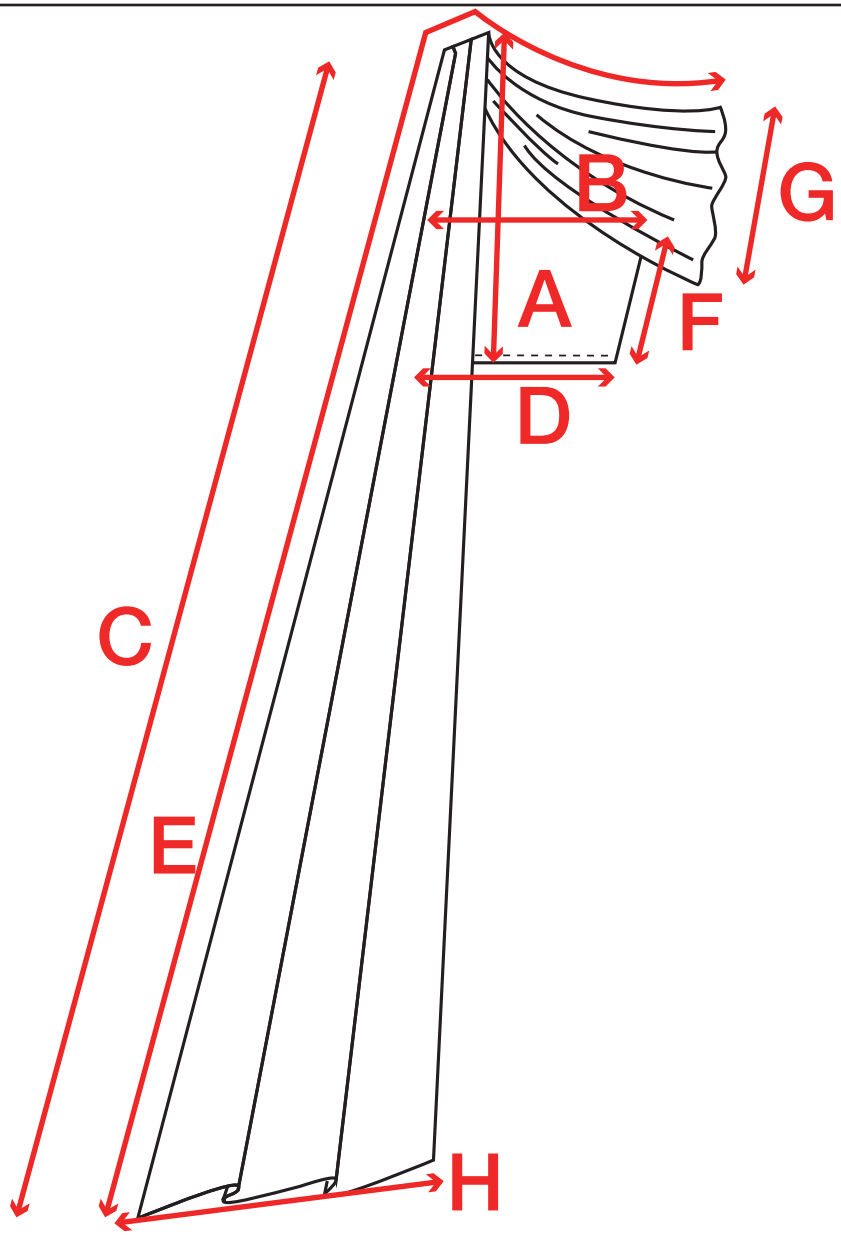

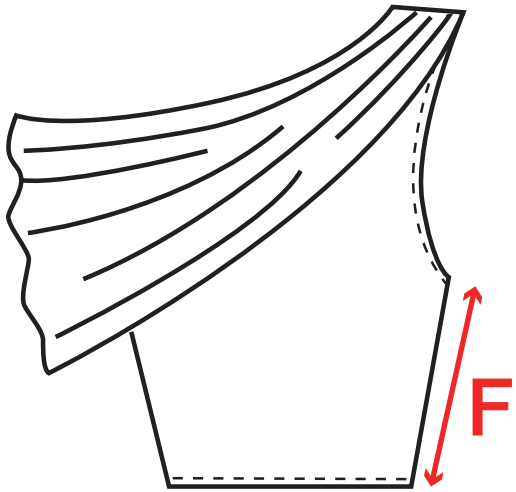

REPRODUCE THE DRAPPING VISUALLY