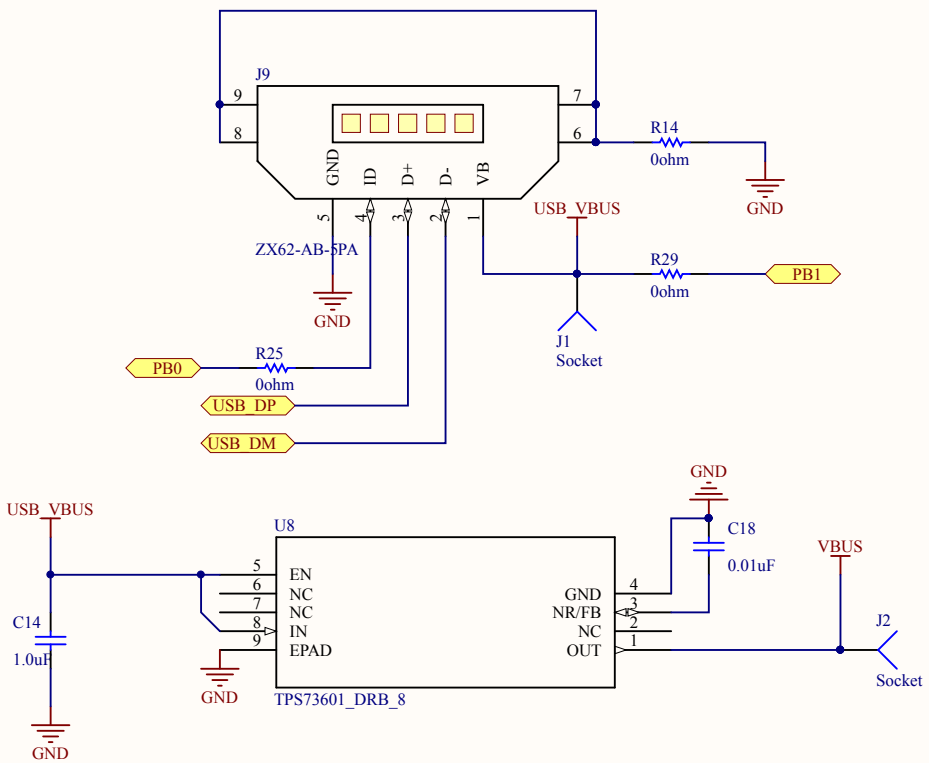

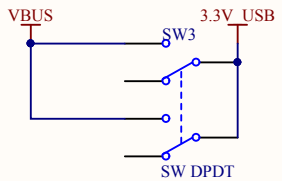

Title		
Size A4	Number	Revision
Date: 2014/10/19		Sheet of
File: C:\Users\..\USB.SchDoc		Drawn By: