Intelligent Agent AS

Sheet: /
File: Recore.sch

Title: Recore

Size: A3	Date: 2020-10-19	**Rev: A5**
KiCad E.D.A. kicad 5.1.9+dfsg1-1		Id: 1/14

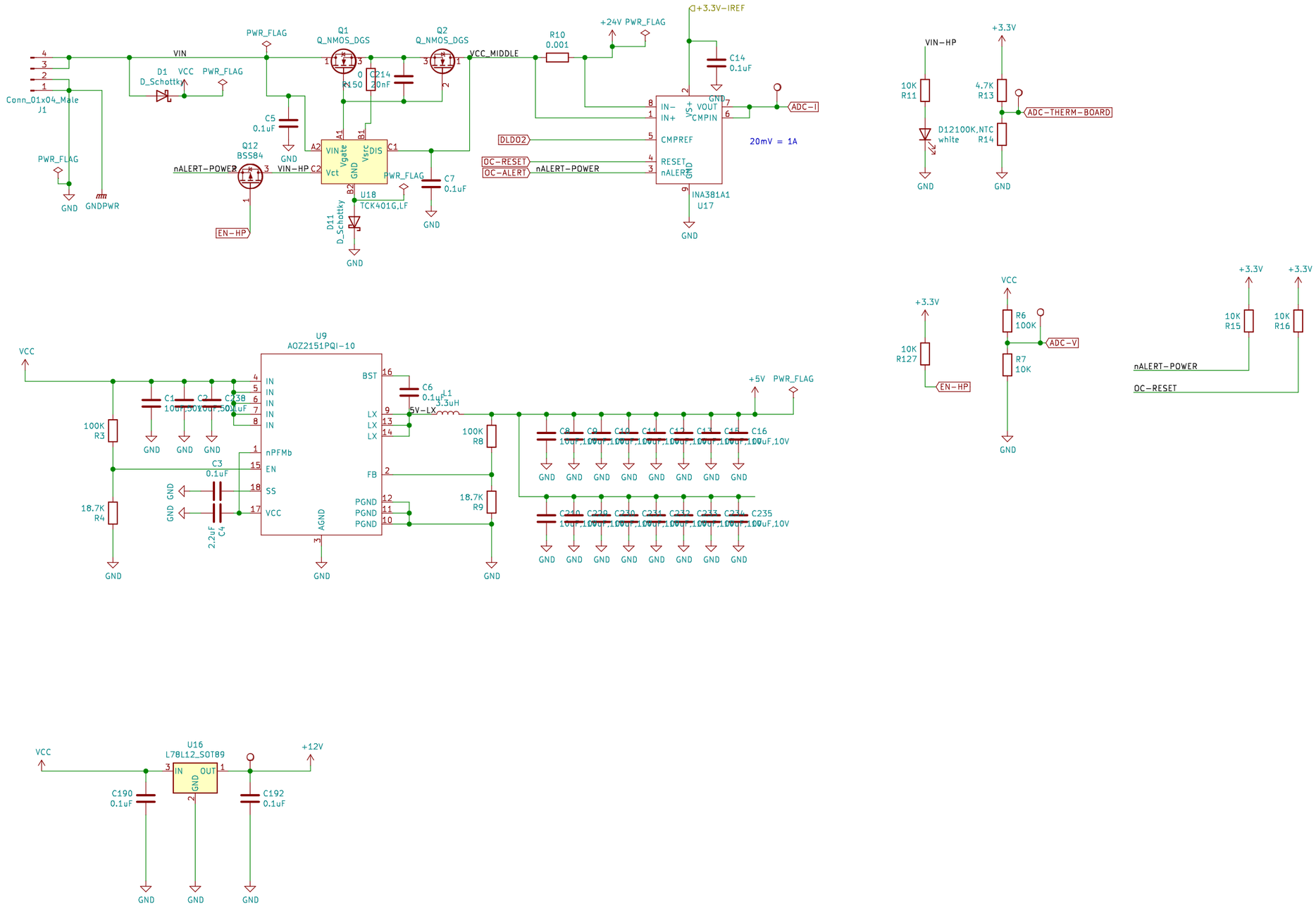

Sheet: /Input-stage/
File: Input-stage.sch

Title:

Size: A3	Date: 2020-10-19	Rev: A4
KiCad E.D.A. kicad 5.1.9+dfsg1-1		Id: 2/14

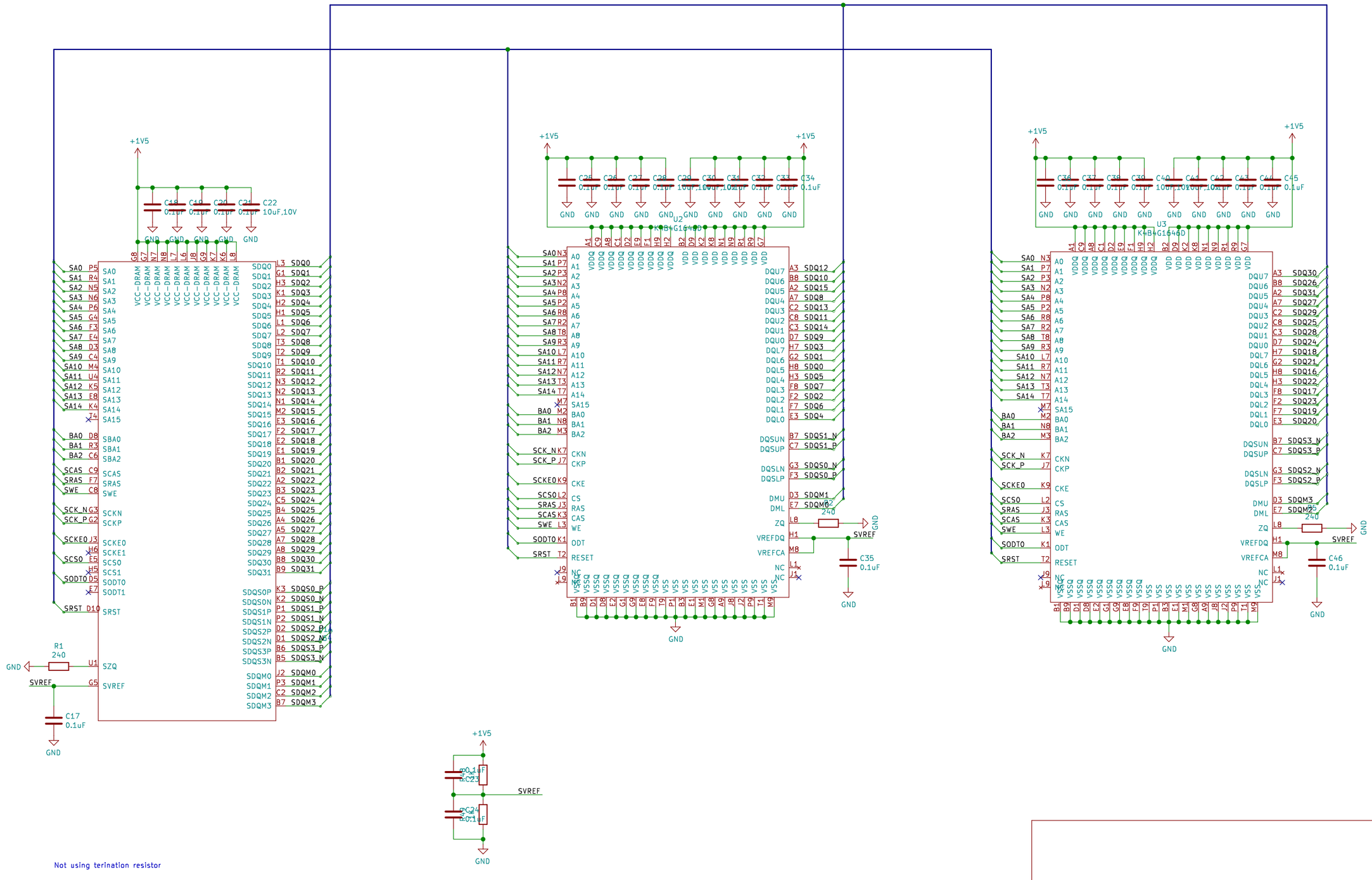

Not using terination resistor

Sheet: /DDR3/
File: ddr3.sch

Title:

Size: A3	Date: 2020-10-19	Rev: A4
KiCad E.D.A. kicad 5.1.9+dfsg1-1		Id: 3/14

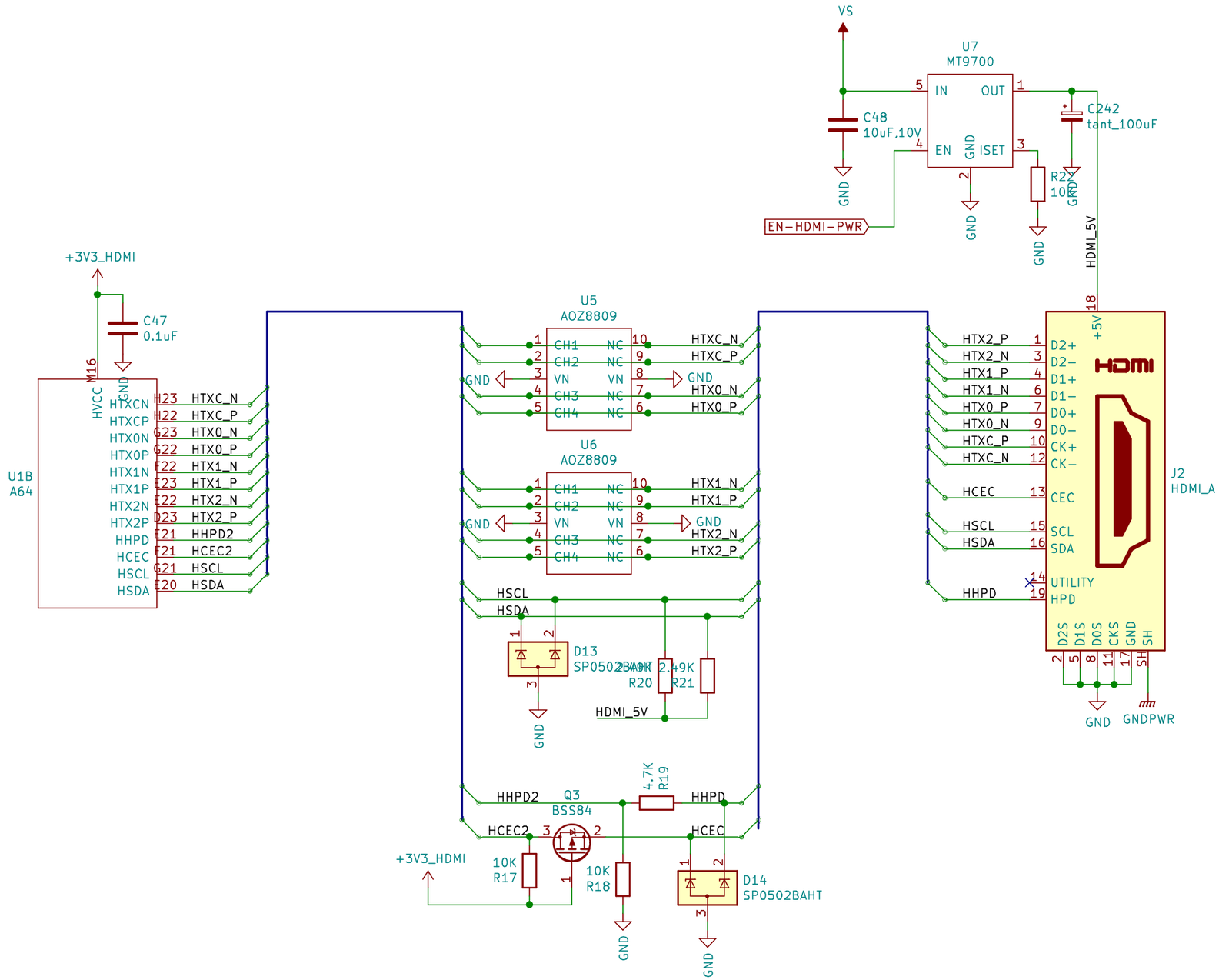

Sheet: /HDMI/
File: HDMI.sch

Title:

Size: A4	Date: 2020-10-19	Rev: A4
KiCad E.D.A. kicad 5.1.9+dfsg1-1		Id: 4/14

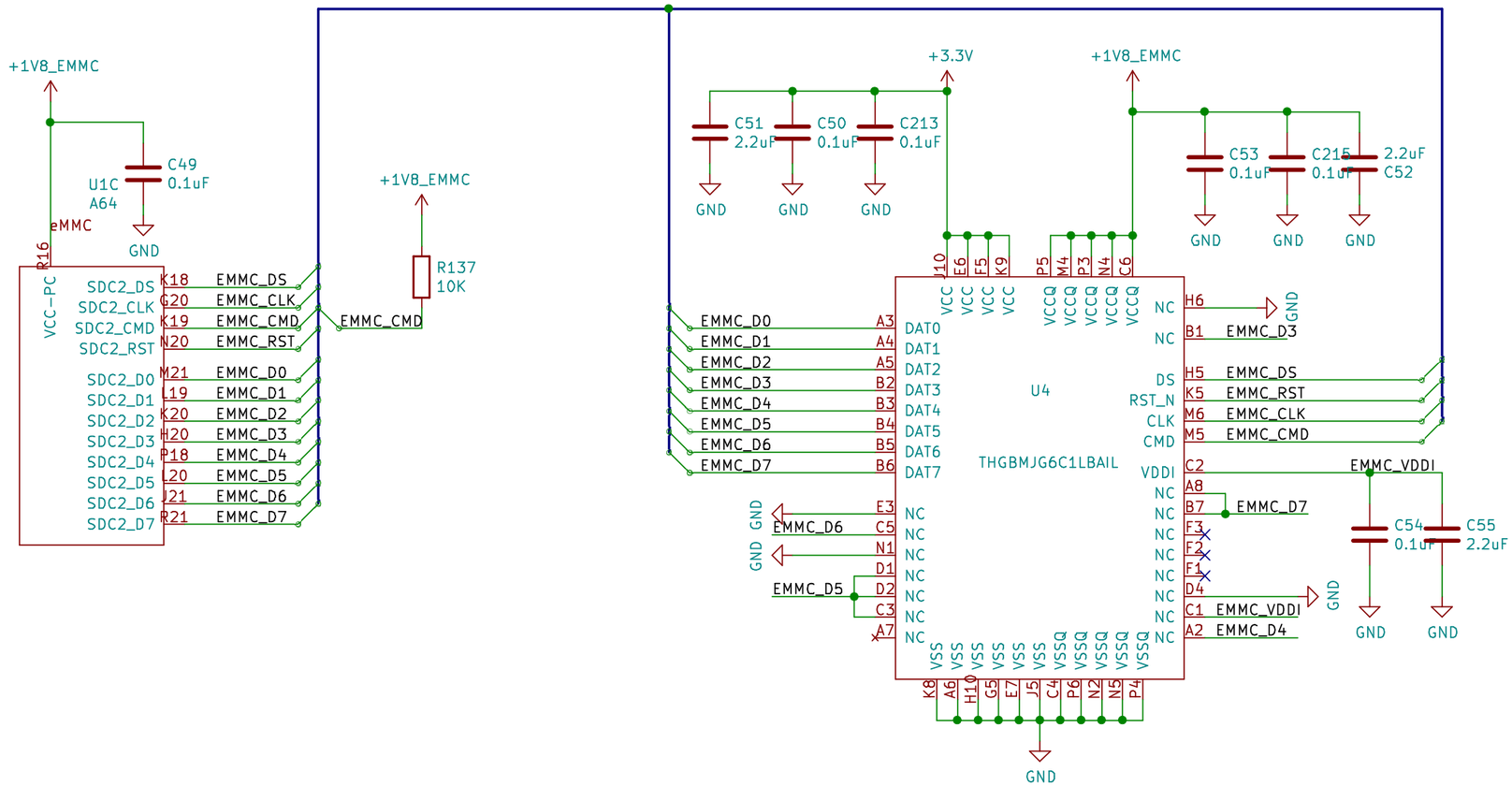

Sheet: /eMMC/
File: eMMC.sch

Title:

Size: A4	Date: 2020-10-19	Rev: A4
KiCad E.D.A. kicad 5.1.9+dfsg1-1		Id: 5/14

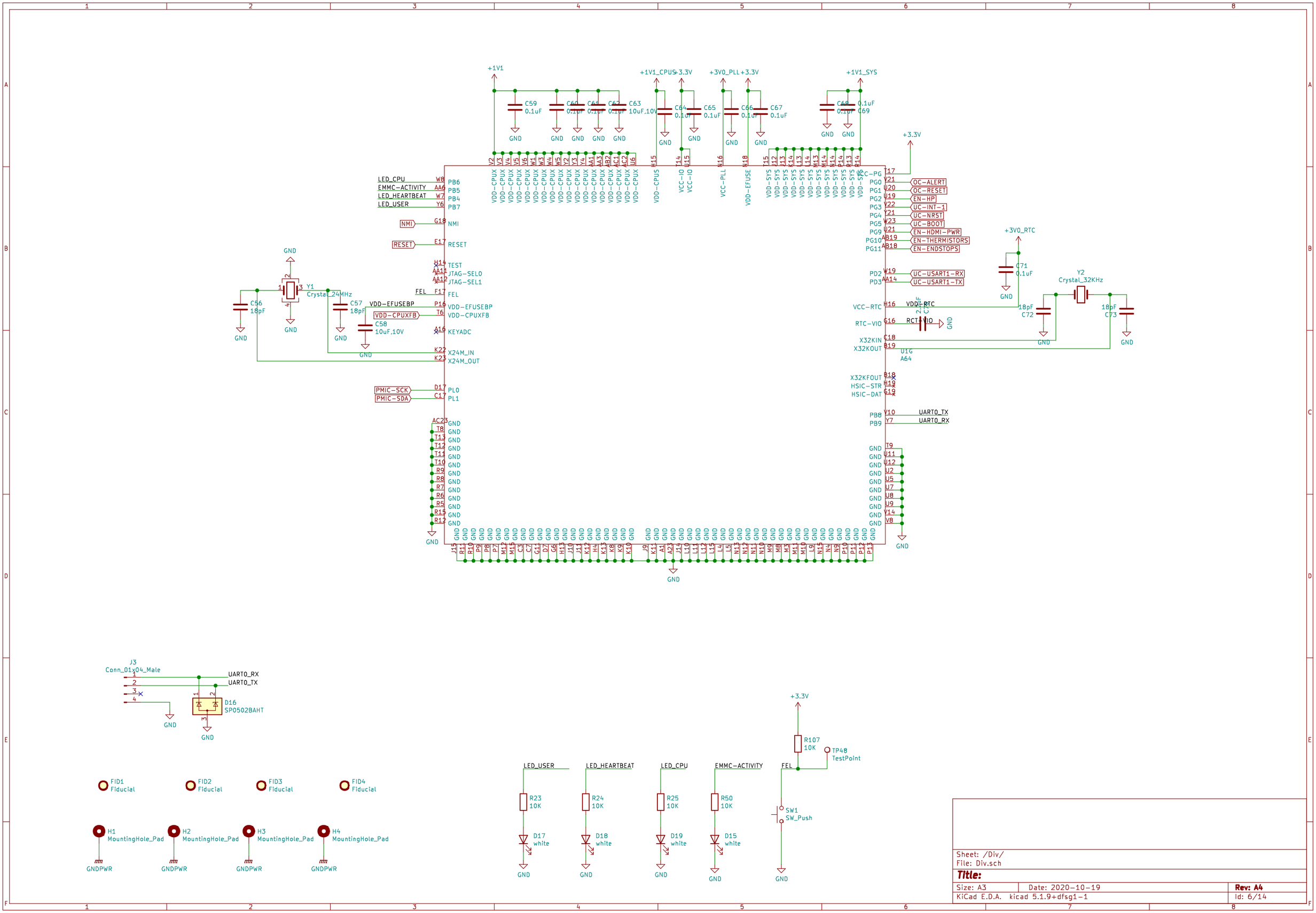

Sheet: /Div/
File: Div.sch

Title:

Size: A3	Date: 2020-10-19	Rev: A4
KiCad E.D.A. kicad 5.1.9+dfsg1-1		Id: 6/14

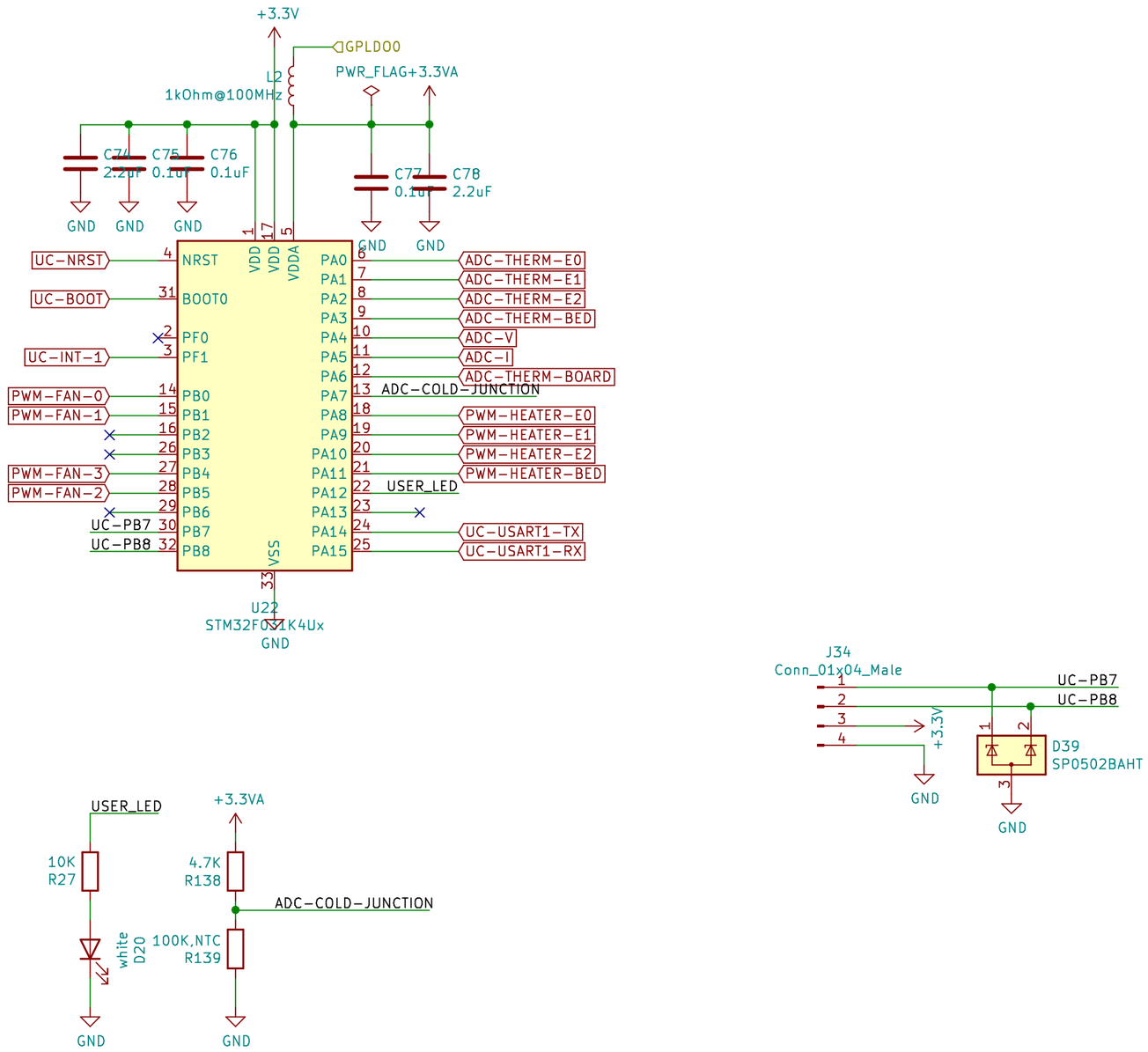

Sheet: /Microcontroller/
File: Microcontroller.sch

Title:

Size: A4	Date: 2020-10-19	Rev: A4
KiCad E.D.A. kicad 5.1.9+dfsg1-1		Id: 7/14

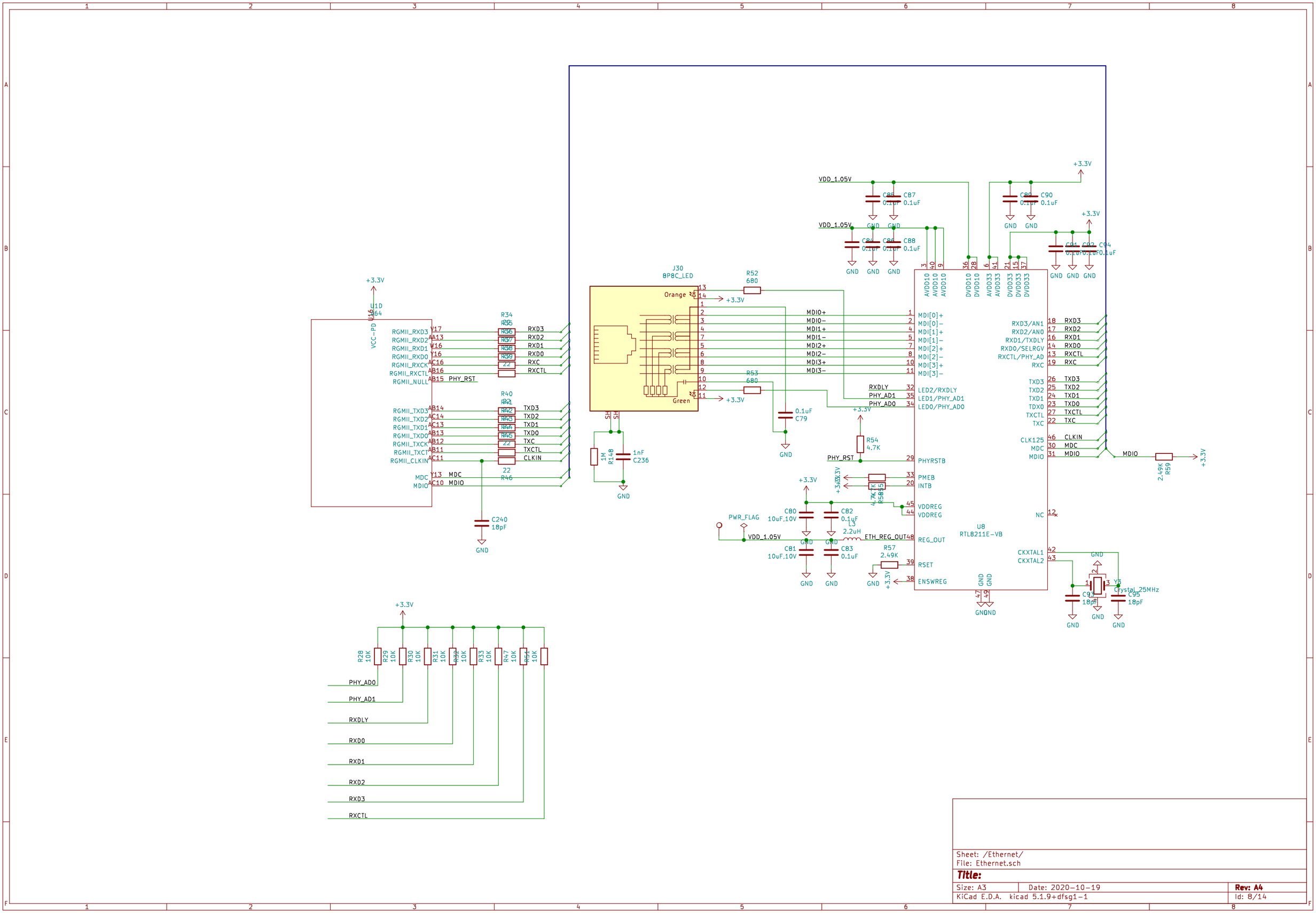

Sheet: /Ethernet/
File: Ethernet.sch

Title:

Size: A3	Date: 2020-10-19	Rev: A4
KiCad E.D.A. kicad 5.1.9+dfsg1-1		Id: 8/14

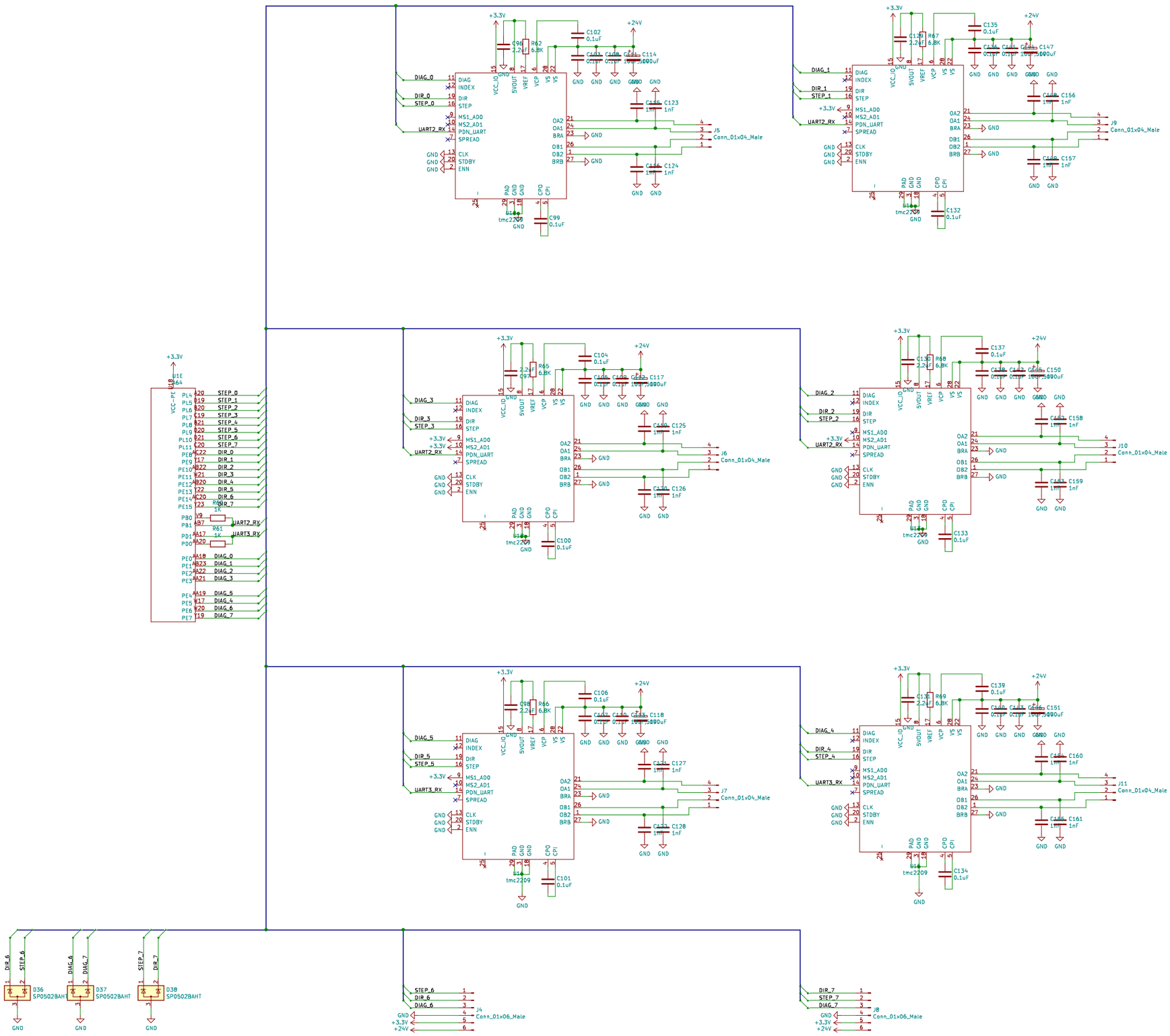

Sheet: /Steppers/
File: Steppers.sch

Title:

Size: A2	Date: 2020-10-19	Rev: A4
KiCad E.D.A. kicad 5.1.9+dfsg1-1		Id: 9/14

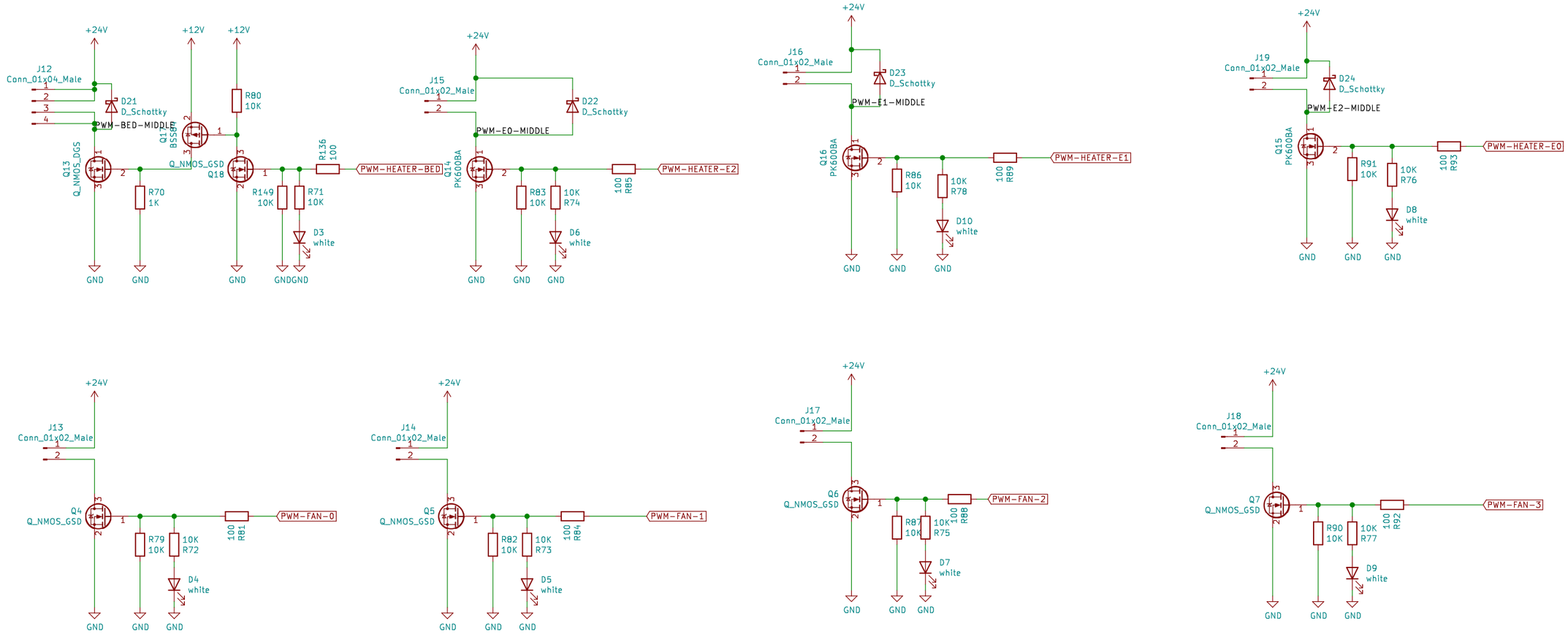

Sheet: /Mosfets/
File: Mosfets.sch

Title:

Size: A3	Date: 2020-10-19	**Rev: A4**
KiCad E.D.A. kicad 5.1.9+dfsg1-1		Id: 10/14

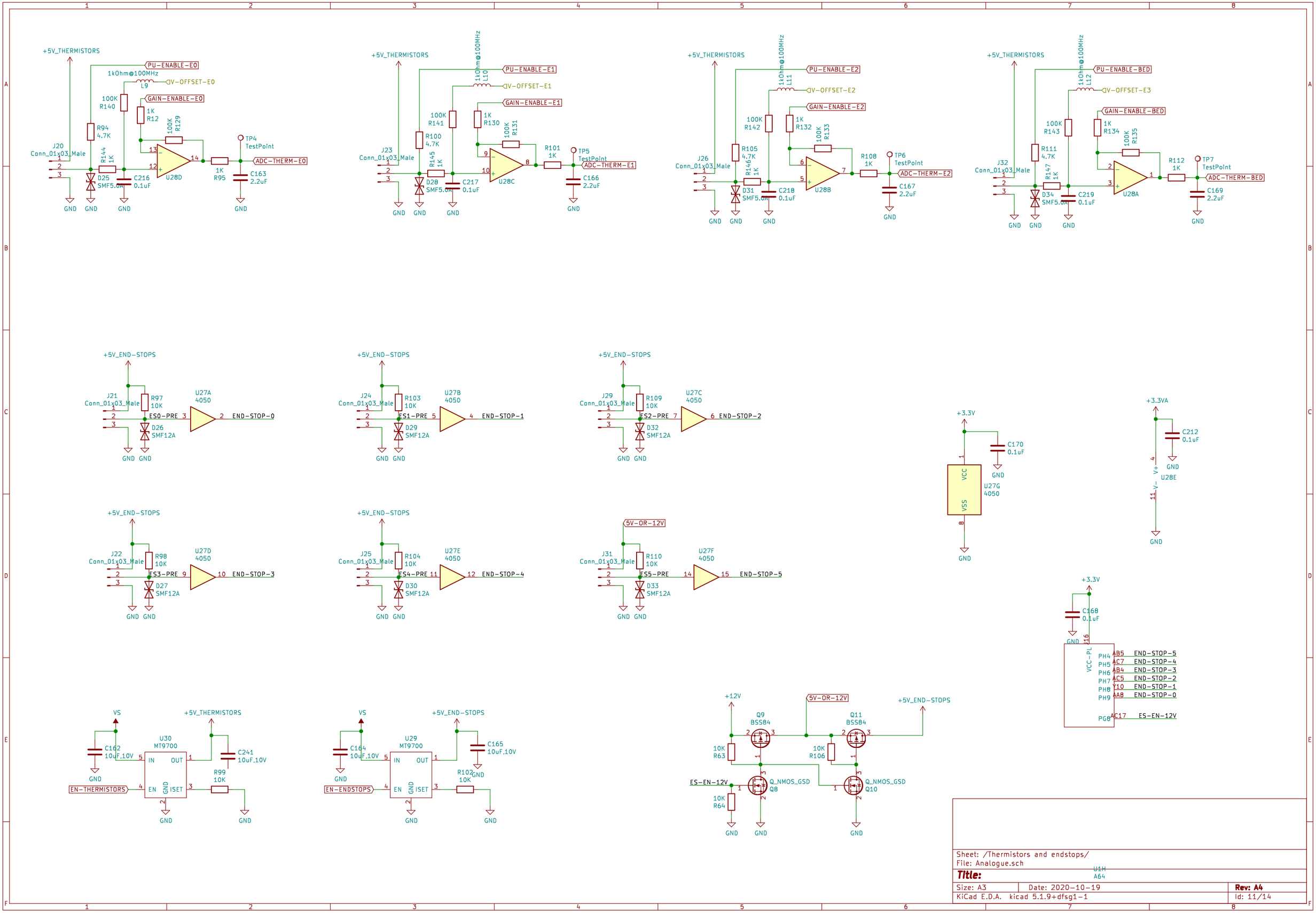

Sheet: /Thermistors and endstops/
File: Analogue.sch

Title:

Size: A3	Date: 2020-10-19	Rev: A4
KiCad E.D.A. kicad 5.1.9+dfsg1-1		Id: 11/14

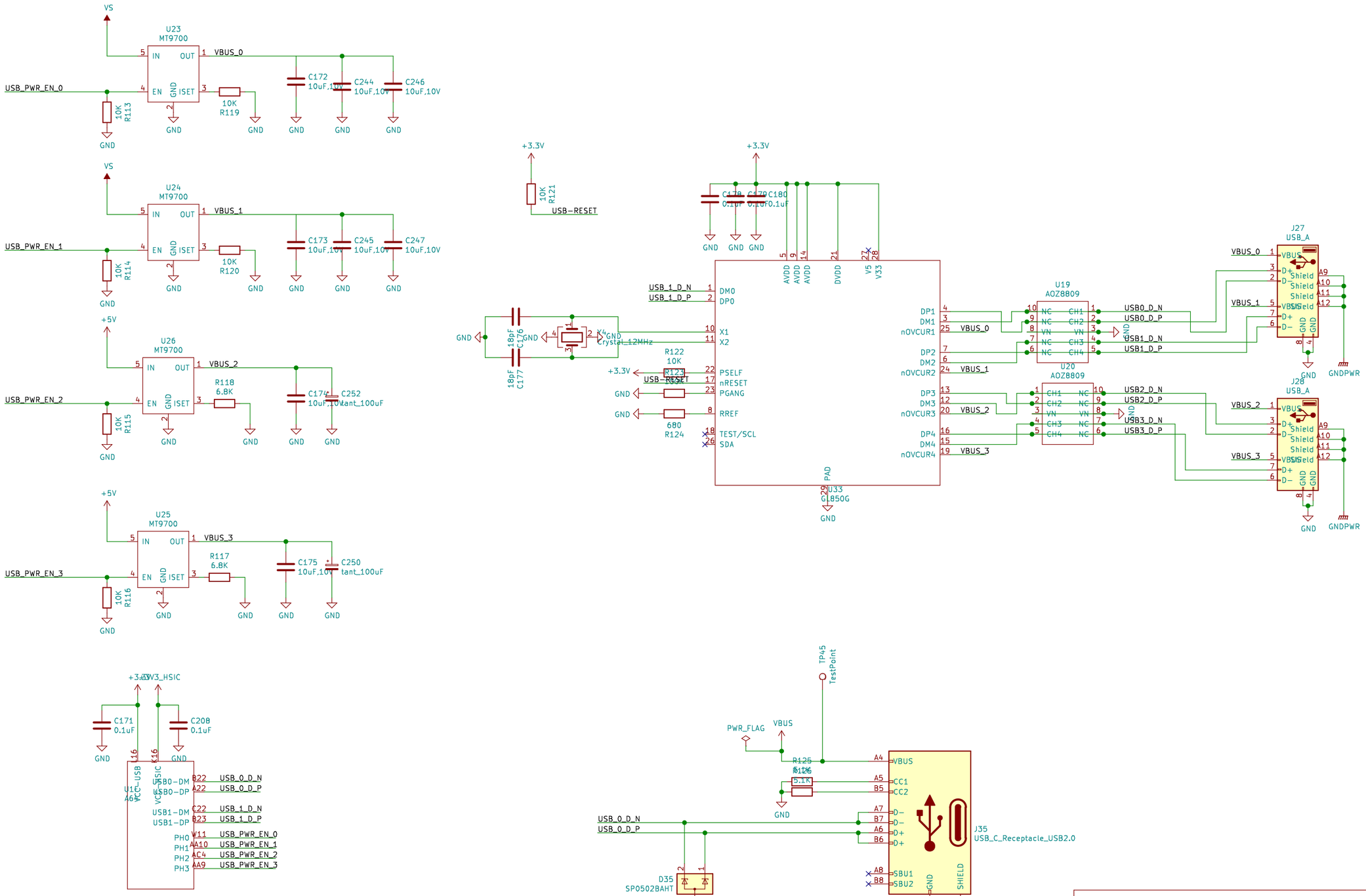

Intelligent Agent AS

Sheet: /USB/
File: USB.sch

Title: Recore

Size: A3	Date: 2020-10-19	Rev: A4
KiCad E.D.A. kicad 5.1.9+dfsg1-1		Id: 12/14

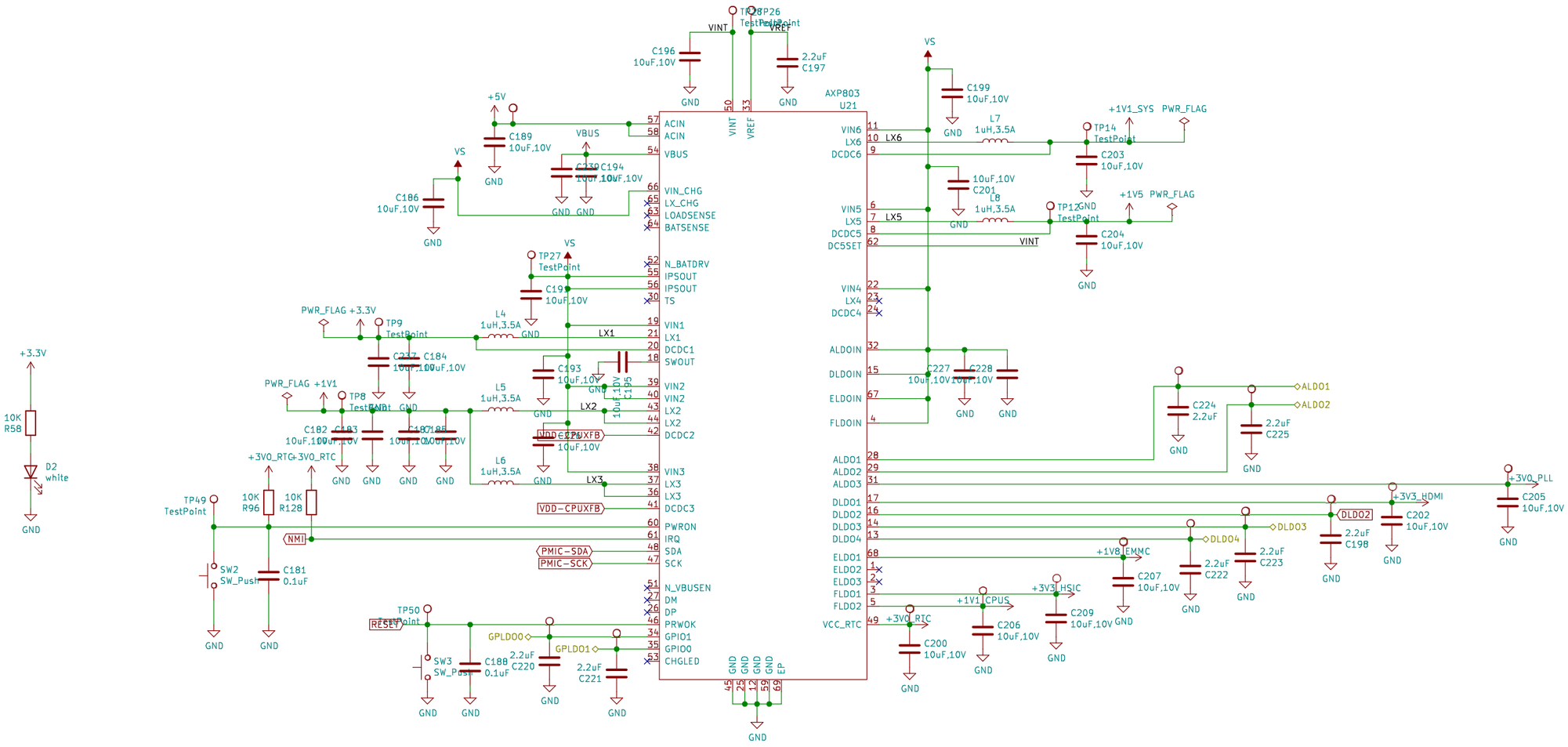

Sheet: /PMIC/
File: PMIC.sch

Title:

Size: A3	Date: 2020-10-19	Rev: A4
KiCad E.D.A. kicad 5.1.9+dfsg1-1		Id: 13/14

Sheet: /Analog/
File: Analog.sch

Title:

Size: A4	Date: 2020-10-19	**Rev: A4**
KiCad E.D.A. kicad 5.1.9+dfsg1-1		Id: 14/14