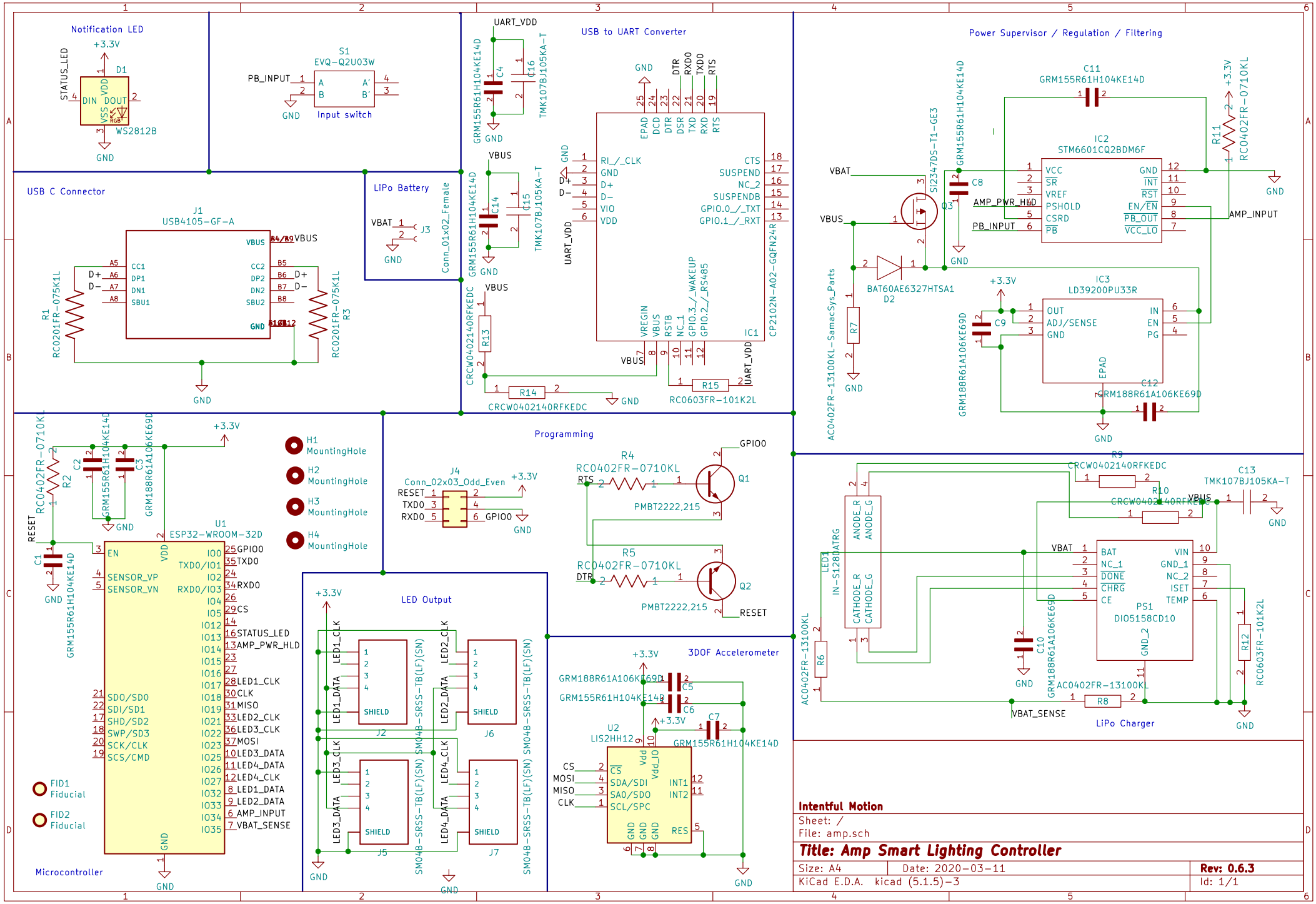
Notification LED
STATUS_LED
+3.3V
D1
WS2812B
GND
S1
EVQ-Q2U03W
PB_INPUT
Input switch
USB C Connector
J1
USB4105-GF-A
VBUS
CC1
DP1
DN1
SBU1
CC2
DP2
DN2
SBU2
D+
D-
R1
RC0201FR-075K1L
R3
LiPo Battery
VBAT
J3
Conn_01x02_Female
USB to UART Converter
UART_VDD
GRM155R61H104KE14D
TMK107BJ105KA-T
C4
C16
C14
C15
CRCW0402140RFKEDC
R13
R14
R15
RC0603FR-101K2L
IC1
CP2102N-A02-GQFN24R
RI/_CLK
GND
D+
D-
VIO
VDD
EPAD
DCD
DTR
DSR
TXD
RXD
RTS
CTS
SUSPEND
NC_2
SUSPENDB
GPIO.0_/_TXT
GPIO.1_/_RXT
VREGIN
RSTB
NC_1
GPIO.3_/_WAKEUP
GPIO.2_/_RS485
Power Supervisor / Regulation / Filtering
C11
GRM155R61H104KE14D
IC2
STM6601CQ2BDM6F
VCC
SR
VREF
PSHOLD
CSRD
PB
GND
INT
RST
EN/EN
PB_OUT
VCC_LO
AMP_PWR_HLD
AMP_INPUT
PB_INPUT
R11
RC0402FR-0710KL
Si2347DS-T1-GE3
Q3
C8
BAT60AE6327HTSA1
D2
R7
AC0402FR-13100KL-SamacSys_Parts
IC3
LD39200PU33R
OUT
ADJ/SENSE
IN
EN
PG
C9
GRM188R61A106KE69D
C12
Programming
J4
Conn_02x03_Odd_Even
RESET
TXD0
RXD0
GPIO0
R4
RC0402FR-0710KL
Q1
PMBT2222,215
R5
Q2
DTR
H1 MountingHole
H2 MountingHole
H3 MountingHole
H4 MountingHole
U1
ESP32-WROOM-32D
EN
VDD
SENSOR_VP
SENSOR_VN
IO0
TXD0/IO1
IO2
RXD0/IO3
IO4
IO5
IO12
IO13
IO14
IO15
IO16
IO17
IO18
IO19
IO21
IO22
IO23
IO25
IO26
IO27
IO32
IO33
IO34
IO35
SDO/SD0
SDI/SD1
SHD/SD2
SWP/SD3
SCK/CLK
SCS/CMD
STATUS_LED
AMP_PWR_HLD
CS
LED1_CLK
CLK
MISO
LED2_CLK
LED3_CLK
MOSI
LED3_DATA
LED4_DATA
LED4_CLK
LED1_DATA
LED2_DATA
AMP_INPUT
VBAT_SENSE
FID1 Fiducial
FID2 Fiducial
Microcontroller
LED Output
SHIELD
J2
J5
J6
J7
SM04B-SRSS-TB(LF)(SN)
3DOF Accelerometer
U2
LIS2HH12
Vdd
Vdd_IO
CS
SDA/SDI
SA0/SDO
SCL/SPC
INT1
INT2
RES
GRM188R61A106KE69D
GRM155R61H104KE14D
C5
C6
C7
R9
CRCW0402140RFKEDC
R10
C13
TMK107BJ105KA-T
LED1
IN-S128DATRG
ANODE_R
ANODE_G
CATHODE_R
CATHODE_G
AC0402FR-13100KL
R6
C10
PS1
DIO5158CD10
BAT
NC_1
DONE
CHRG
CE
VIN
GND_1
NC_2
ISET
TEMP
GND_2
R8
R12
RC0603FR-101K2L
LiPo Charger
Intentful Motion
Sheet: /
File: amp.sch
Title: Amp Smart Lighting Controller
Size: A4
Date: 2020-03-11
Rev: 0.6.3
KiCad E.D.A. kicad (5.1.5)-3
Id: 1/1