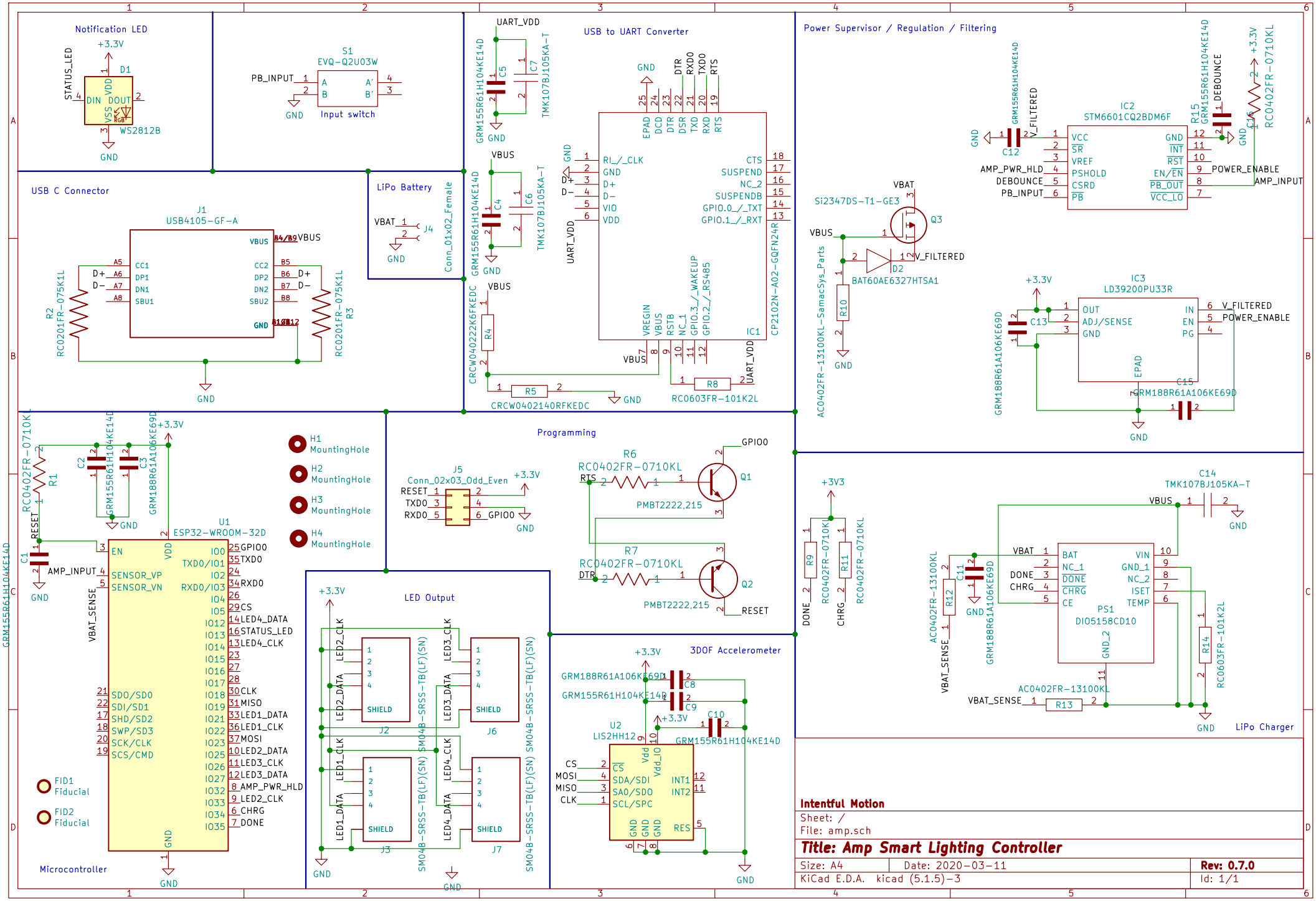
Notification LED
STATUS_LED
+3.3V
D1
DIN DOUT
VDD VSS
WS2812B
GND
S1
EVQ-Q2U03W
PB_INPUT
Input switch
USB C Connector
J1
USB4105-GF-A
VBUS
CC1 DP1 DN1 SBU1
CC2 DP2 DN2 SBU2
D+ D-
R2 RC0201FR-075K1L
R3 RC0201FR-075K1L
LiPo Battery
VBAT
J4
Conn_01x02_Female
USB to UART Converter
UART_VDD
GRM155R61H104KE14D
C5
C7
TMK107BJ105KA-T
C4
C6
CRCW040222K6FKEDC
R4
R5
CRCW0402140RFKEDC
IC1
CP2102N-A02-GQFN24R
RI_/_CLK
GND
D+
D-
VIO
VDD
EPAD DCD DTR DSR TXD RXD RTS
CTS
SUSPEND
NC_2
SUSPENDB
GPIO.0_/_TXT
GPIO.1_/_RXT
VREGIN
VBUS
RSTB
NC_1
GPIO.3_/_WAKEUP
GPIO.2_/_RS485
R8
RC0603FR-101K2L
Power Supervisor / Regulation / Filtering
IC2
STM6601CQ2BDM6F
VCC
SR
VREF
PSHOLD
CSRD
PB
GND
INT
RST
EN/EN
PB_OUT
VCC_LO
AMP_PWR_HLD
DEBOUNCE
PB_INPUT
POWER_ENABLE
AMP_INPUT
V_FILTERED
C12
R15
C16
Si2347DS-T1-GE3
Q3
D2
BAT60AE6327HTSA1
R10
AC0402FR-13100KL-SamacSys_Parts
IC3
LD39200PU33R
OUT
ADJ/SENSE
GND
IN
EN
PG
EPAD
C13
C15
GRM188R61A106KE69D
Programming
J5
Conn_02x03_Odd_Even
RESET
TXD0
RXD0
GPIO0
R6
RC0402FR-0710KL
RTS
Q1
PMBT2222,215
R7
DTR
Q2
RESET
U1
ESP32-WROOM-32D
EN
VDD
SENSOR_VP
SENSOR_VN
IO0 TXD0/IO1 IO2 RXD0/IO3 IO4 IO5 IO12 IO13 IO14 IO15 IO16 IO17 IO18 IO19 IO21 IO22 IO23 IO25 IO26 IO27 IO32 IO33 IO34 IO35
SDO/SD0
SDI/SD1
SHD/SD2
SWP/SD3
SCK/CLK
SCS/CMD
GPIO0
TXD0
RXD0
CS
LED4_DATA
STATUS_LED
LED4_CLK
CLK
MISO
LED1_DATA
LED1_CLK
MOSI
LED2_DATA
LED3_CLK
LED3_DATA
AMP_PWR_HLD
LED2_CLK
CHRG
DONE
VBAT_SENSE
AMP_INPUT
R1 RC0402FR-0710KL
C1
C2 GRM155R61H104KE14D
C3 GRM188R61A106KE69D
H1 MountingHole
H2 MountingHole
H3 MountingHole
H4 MountingHole
FID1 Fiducial
FID2 Fiducial
Microcontroller
LED Output
J2
J3
J6
J7
SHIELD
SM04B-SRSS-TB(LF)(SN)
3DOF Accelerometer
U2
LIS2HH12
CS
MOSI
MISO
CLK
SDA/SDI
SA0/SDO
SCL/SPC
INT1
INT2
RES
Vdd
Vdd_IO
C8
C9
C10
+3V3
R9 RC0402FR-0710KL
R11 RC0402FR-0710KL
DONE
CHRG
C14
TMK107BJ105KA-T
PS1
DIO5158CD10
BAT
NC_1
DONE
CHRG
CE
VIN
GND_1
NC_2
ISET
TEMP
GND_2
C11
R12 AC0402FR-13100KL
R13 AC0402FR-13100KL
R14 RC0603FR-101K2L
LiPo Charger
Intentful Motion
Sheet: /
File: amp.sch
Title: Amp Smart Lighting Controller
Size: A4
Date: 2020-03-11
Rev: 0.7.0
KiCad E.D.A. kicad (5.1.5)-3
Id: 1/1