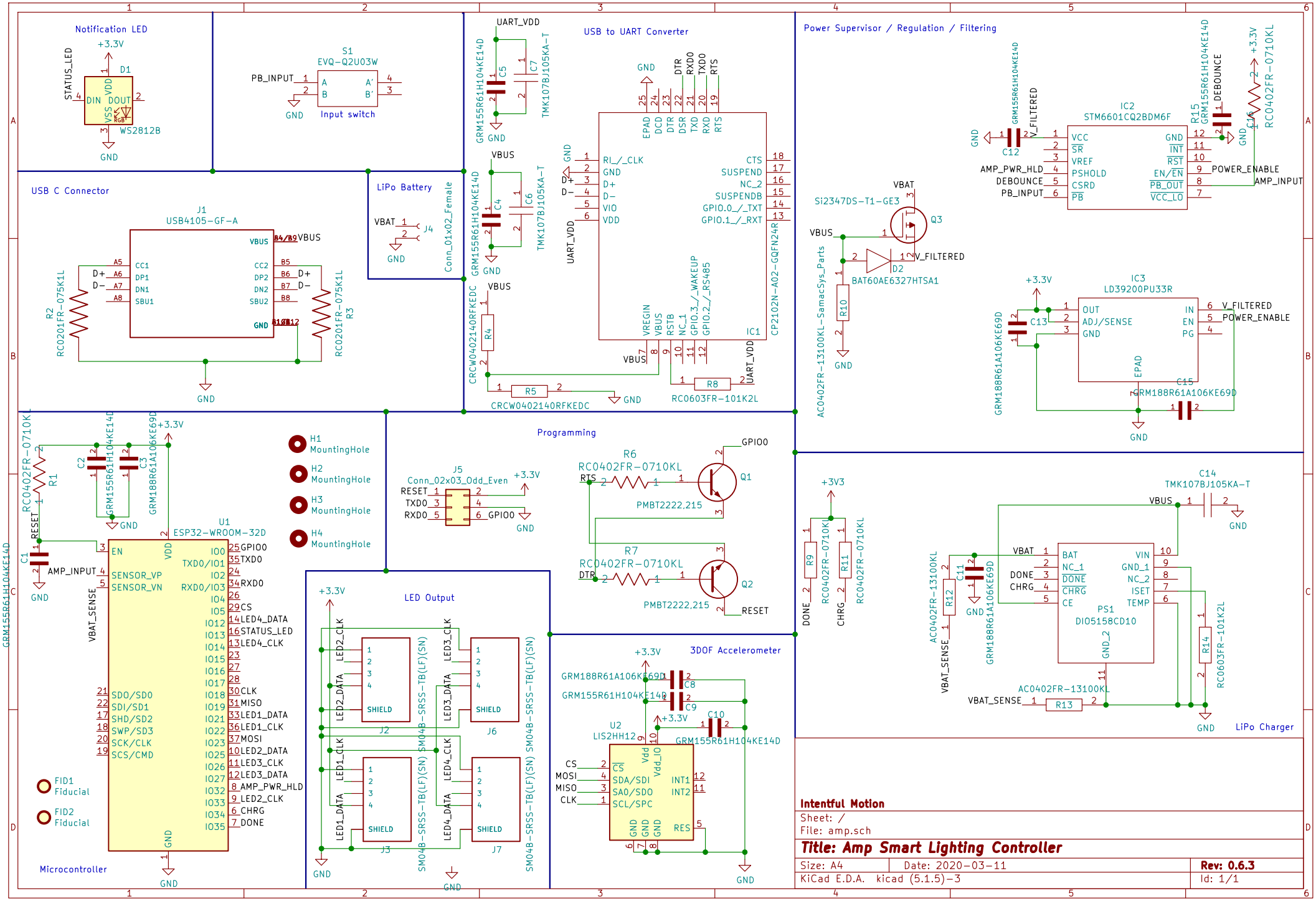
Notification LED
STATUS_LED
+3.3V
D1
DIN DOUT
VDD VSS
WS2812B
GND
S1
EVQ-Q2U03W
PB_INPUT
Input switch
USB C Connector
J1
USB4105-GF-A
VBUS
CC1 DP1 DN1 SBU1
CC2 DP2 DN2 SBU2
D+ D-
R2 RC0201FR-075K1L
R3 RC0201FR-075K1L
LiPo Battery
VBAT
J4
Conn_01x02_Female
USB to UART Converter
UART_VDD
GRM155R61H104KE14D
C5 C7
TMK107BJ105KA-T
C4 C6
CRCW0402140RFKEDC
R4 R5
IC1
CP2102N-A02-GQFN24R
RI_/_CLK GND D+ D- VIO VDD
CTS SUSPEND NC_2 SUSPENDB GPIO.0_/_TXT GPIO.1_/_RXT
VREGIN VBUS RSTB NC_1 GPIO.3_/_WAKEUP GPIO.2_/_RS485
EPAD DCD DTR DSR TXD RXD RTS
R8 RC0603FR-101K2L
Power Supervisor / Regulation / Filtering
IC2
STM6601CQ2BDM6F
VCC SR VREF PSHOLD CSRD PB
GND INT RST EN/EN PB_OUT VCC_LO
AMP_PWR_HLD
DEBOUNCE
PB_INPUT
POWER_ENABLE
AMP_INPUT
V_FILTERED
R15 GRM155R61H104KE14D
C16 RC0402FR-0710KL
C12
Si2347DS-T1-GE3
Q3
D2
BAT60AE6327HTSA1
AC0402FR-13100KL-SamacSys_Parts
R10
IC3
LD39200PU33R
OUT ADJ/SENSE GND
IN EN PG
EPAD
C13 GRM188R61A106KE69D
C15 GRM188R61A106KE69D
R1 RC0402FR-0710KL
C2 GRM155R61H104KE14D
C3 GRM188R61A106KE69D
C1 GRM155R61H104KE14D
RESET
AMP_INPUT
VBAT_SENSE
U1
ESP32-WROOM-32D
EN VDD SENSOR_VP SENSOR_VN
IO0 TXD0/IO1 IO2 RXD0/IO3 IO4 IO5 IO12 IO13 IO14 IO15 IO16 IO17 IO18 IO19 IO21 IO22 IO23 IO25 IO26 IO27 IO32 IO33 IO34 IO35
SDO/SD0 SDI/SD1 SHD/SD2 SWP/SD3 SCK/CLK SCS/CMD
GPIO0 TXD0 RXD0 CS LED4_DATA STATUS_LED LED4_CLK CLK MISO LED1_DATA LED1_CLK MOSI LED2_DATA LED3_CLK LED3_DATA AMP_PWR_HLD LED2_CLK CHRG DONE
H1 MountingHole
H2 MountingHole
H3 MountingHole
H4 MountingHole
FID1 Fiducial
FID2 Fiducial
Microcontroller
Programming
J5
Conn_02x03_Odd_Even
RESET TXD0 RXD0 GPIO0
R6 RC0402FR-0710KL
R7 RC0402FR-0710KL
Q1 PMBT2222,215
Q2 PMBT2222,215
LED Output
SHIELD
J2 J3 J6 J7
LED1_CLK LED1_DATA LED2_CLK LED2_DATA LED3_CLK LED3_DATA LED4_CLK LED4_DATA
SM04B-SRSS-TB(LF)(SN)
3DOF Accelerometer
U2
LIS2HH12
GRM188R61A106KE69D
GRM155R61H104KE14D
C8 C9 C10
CS MOSI MISO CLK
SDA/SDI SA0/SDO SCL/SPC
INT1 INT2 RES
Vdd Vdd_IO
R9 RC0402FR-0710KL
R11 RC0402FR-0710KL
+3V3
DONE CHRG
C14 TMK107BJ105KA-T
PS1
DIO5158CD10
BAT NC_1 DONE CHRG CE
VIN GND_1 NC_2 ISET TEMP
GND_2
C11 GRM188R61A106KE69D
R12 AC0402FR-13100KL
R13 AC0402FR-13100KL
R14 RC0603FR-101K2L
LiPo Charger
Intentful Motion
Sheet: /
File: amp.sch
Title: Amp Smart Lighting Controller
Size: A4
Date: 2020-03-11
Rev: 0.6.3
KiCad E.D.A. kicad (5.1.5)-3
Id: 1/1