LATENT TOPIC MODEL FOR IMAGE ANNOTATION BY MODELING TOPIC CORRELATION

Xing Xu, Atsushi Shimada, and Rin-ichiro Taniguchi

Kyushu University, Japan
{xing, atsushi}@limu.ait.kyushu-u.ac.jp, {ring}@ait.kyushu-u.ac.jp

ABSTRACT

For the task of image annotation, traditional probabilistic topic models based on Latent Dirichlet Allocation (LDA) [1], assume that an image is a mixture of *latent topics*. An inevitable limitation of LDA is the inability to model topic correlation since topic proportions of an image are generated independently. Motivated by Correlated Topic Model (CTM) [2] which derives from natural language processing to model topic correlation of a document, we extend the popular LDA based models (corrLDA [3], sLDA-bin [4], trmmLDA [5]) to CTM based models (corrCTM, sCTM-bin, trmmCTM). We present a comprehensive comparison between CTM based and LDA based models on three benchmark datasets, illustrating the superior annotation performance of proposed CTM based models, by means of propagating topic correlation among image features and annotation words.

***Index Terms*—** Latent Topic Model, Automatic Image Annotation, Topic Correlation

1. INTRODUCTION

Automatic image annotation is an active and challenging problem in computer vision research. Given an unseen image with no caption, the goal of image annotation is to predict relevant textual words from a word vocabulary to describe visual content of that image.

Our work is built on the special case of latent topic models. The concept of *latent topic* is introduced to reduce original higher dimensional image feature space and annotation word space to lower dimensional topic space, under the assumption that each image feature and annotation word can exhibit multiple components of "topics." Previous LDA based topic models for image annotation are all under Dirichlet assumption: topic proportions of an image are randomly drawn from a Dirichlet distribution. Under Dirichlet, each topic proportion is assigned independently, which leads to an unrealistic limitation that the presence of one topic is not correlated with the presence of others. Actually, annotation words of an image have correlation upon image content, this correlation could be modeled by topic correlations. To our knowledge, no attempt has been made in the past which directly considers topic correlation in annotation problem. Inspired by pioneering work CTM [2], which produces correlated topic proportions for words in one document using logistic normal mapping, we adopt the methodology of CTM and extend it to image annotation task.

17: sky, mountain, road, trees, field
34: road, car, sky, trees, water
1: sky, road, trees, buildings, sidewalk
42: road, buildings, car, sidewalk, trees
43: sky, trees, field, mountain, water

(a) (**Left**) mixture of "topics" generated from corrCTM, (**Right**) topic index and representative words in each topic.

47: mountain, stone, trees, sky, clouds
17: sky, mountain, rock, trees, water
35: road, water, sky, field, buildings
48: road, water, mountain, sky, rock
33: tree, road, water, sky, buildings

(b) (**Left**) mixture of "topics" generated from corrLDA, (**Right**) topic index and representative words in each topic.

Fig. 1. Modeling topic correlation to formulate semantically compact topic. The final annotation words predicted by corrCTM are {*sky*, *trees*, *buildings*, *road*, *sidewalk*}, which are more precise than {*sky*, *mountain*, *water*, *rock*, *trees*} by corrLDA. Test image is from LabelMe [6] dataset. It is better to zoom out to view topic indexes in test image.

The main contributions of our work are three folds: 1) We make the first trial to extend CTM to image annotation problem, and we redesign the popular LDA based topic models such as corrLDA [3], sLDA-bin [4] and trmmLDA [5] as CTM based models, which incorporate topic correlation. 2) We derive a general mean-field variational algorithm for parameter estimation in these CTM based models. 3) We make an informative comparison of annotation performance between proposed CTM based and previous LDA based models through standard measure criteria, which is rarely provid-

This research has been partly supported by Grant-in-Aid for Scientific Research (B), Grant Number 24300074.

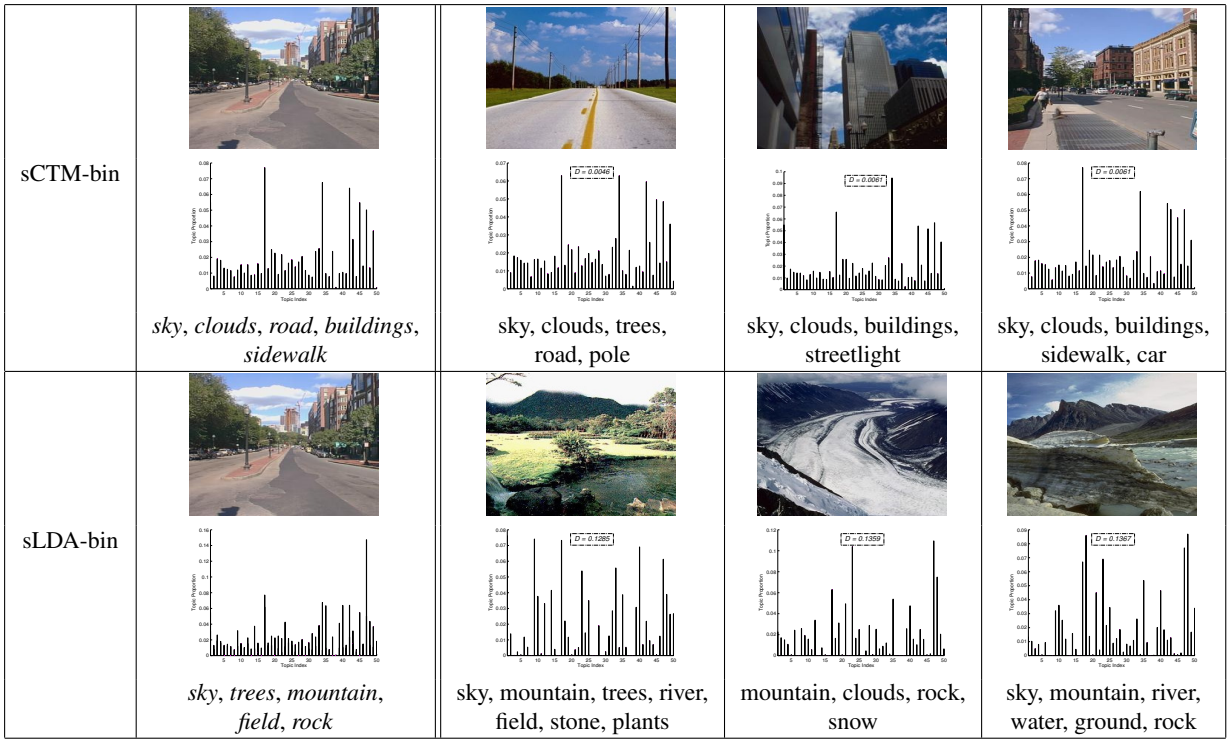

Fig. 2. Modeling topic correlation to formulate correlated empirical topic proportions. The second column is test image and its histogram of empirical topic proportions, the third to fifth column are "neighbor images" selected according to nearest Hellinger distance [2] (D in each histogram). The italic words indicate predicted annotations for test image, while the normal words are ground truth annotations for "neighbor images".

ed in previous works [3, 4, 5, 7].

We find that modeling topic correlation has two promising advantages that improve annotation performance. Firstly, image would be assigned with correlated topics, each topic tends to be semantically compact and represented by more co-occurred words (see Fig. 1 the topic representation in our proposed corrCTM and previous corrLDA models). Secondly, as shown in Fig. 2, images share similar empirical topic proportions would have similar visual content and related annotation words in proposed sCTM-bin, whereas this internal correlation is overlooked in previous sLDA-bin.

In the next section, we discuss notable contributions in the field of image annotation. In Section 3, we take two typical CTM based topic models (corrCTM and sCTM-bin) for instance, to supply a general framework of variational algorithm in CTM based models. We present experimental evaluation of CTM based models on three real-world datasets in Section 4. Finally, we summarize our finding in Section 5 and make conclusion.

2. RELATED WORK

Previous works on image annotation can be summarized into three groups. The first group, discriminative model, considers predicting words as a multi-class labeling problem [8, 9], learns a separate classifier for each word, and then uses these classifiers to predict the presence / absence of each particular word. Usually SVM, boosting, multi-label learning methods are typically used to train classifiers. This line of approaches might ignore the correlation structures among words which can be useful for prediction.

The second group, generative model [3, 5, 10], assumes underlying hidden factors to define the joint distribution over image features and annotation words, and these hidden factors are utilized to predict the conditional probability over words given image features. Compared with discriminative model, the generative method learns a single model for all words and yields a better modeling of image and word dependencies.

The third family can be treated as hybrid model, which essentially applies discriminative or generative model after a specified preprocessing. For example, selecting nearest neighbors instead of all samples to train classifiers [11], choosing discriminative features using feature sparsity and metric learning in distance space [12, 13], and modeling association between image features and annotation words through Bayesian network or graph theory. The hybrid model is to refine original input data to improve model efficiency.

Our work falls under a special case of latent topic model in generative model. Previous LDA based topic models

can be categorized into two types: 1) C-type, which builds correspondence between each image feature and each annotation word. Each annotation word is restricted to be associated with one specific image feature, and this type includes corrLDA [3], trmmLDA [5] and JLDA [7], 2) R-type, which treats empirical topic proportions of whole image as a reduced dimensional "feature vector," annotation words as discrete response values, then regression models (linear Gaussian regression or logistic regression) are used to predict annotations. This type contains sLDA-bin [4].

In the next section, we choose typical corrLDA in C-type and sLDA-bin in R-type to extend our CTM based models: corrCTM and sCTM-bin.

3. CTM BASED MODELS

3.1. Model Interpretation

Each image is a bag of M visual feature points $\mathbf{v} = \{v_{1:M}\}$, where v_m is a unit-basis vector of dimension V_s (the size of visual feature dictionary) with exactly one non-zero entry representing the m-th visual feature. Similarly, for one image with N annotation words $\mathbf{w} = \{w_{1:N}\}$, we denote each word w_n as a unit-basis vector of dimension V_t (size of word dictionary) with only one takes value 1 and 0 otherwise. Thus, a collection of D training image-word pairs can be denoted as $\{\mathbf{v}_{1:D}, \mathbf{w}_{1:D}\}$.

As the graphical representations showed in Fig. 3, the

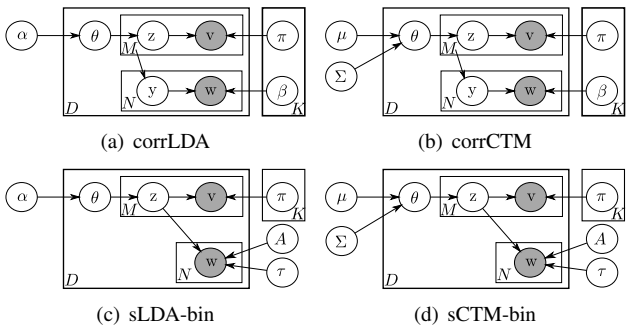

(a) corrLDA (b) corrCTM

(c) sLDA-bin (d) sCTM-bin

Fig. 3. Graphical representations of LDA based models *and* proposed CTM based models: (a)corrLDA, (b)corrCTM, (c)sLDA-bin, (d)sCTM-bin.

generative processes of CTM based models (Fig. 3(b)(d)) are identical to the general processes of LDA based models (Fig. 3(a)(c)), except that topic proportions θ are drawn form logistic norm rather than Dirichlet. For total K topics, let $\{\mu, \Sigma\}$ be K-dimensional mean and variance matrix of normal distribution, an image with M feature points and N annotation words in our corrCTM and sCTM-bin can be generated as following processes:

corrCTM:

1. Draw topic proportions $\theta|\{\mu, \Sigma\} \sim \text{Norm}(\mu, \Sigma)$
2. For each visual feature v_m, $m \in \{1, ..., M\}$:
   - **(a)** Draw topic assignment $z_m|\theta \sim \text{Mult}(f(\theta))$
   - **(b)** Draw feature point $v_m|z_m \sim \text{Mult}(\pi_{z_m})$
3. For each textual word w_n, $n \in \{1, ...N\}$:
   - **(a)** Draw feature index $y_n \sim \text{Unif}(1, ..., M)$
   - **(b)** Draw textual word $w_n \sim \text{Mult}(\beta_{z_{y_n}})$

Here topic-feature matrix $\pi_{1:K}$ are K multinomials with dimension V_s, topic-word matrix $\beta_{1:K}$ are K multinomials with dimension V_t. $f(\theta)$ is a logistic normal function, where $f(\theta_i) = \exp\theta_i / \sum_{j=1}^{K} \exp\theta_j$. "Norm" means normal distribution, "Mult" means multinomial distribution, and "Unif" indicates uniform distribution.

sCTM-bin:

1. Draw topic proportions $\theta|\{\mu, \Sigma\} \sim \text{N}(\mu, \Sigma)$
2. For each visual feature v_m, $m \in \{1, ..., M\}$:
   - **(a)** Draw topic assignment $z_m|\theta \sim \text{Mult}(f(\theta))$
   - **(b)** Draw feature point $v_m|z_m \sim \text{Mult}(\pi_{z_m})$
3. Given the empirical topic proportions $\bar{\mathbf{z}} = \frac{1}{M}\sum_{m=1}^{M} z_m$, for each textual word w_i in word vocabulary, $i \in \{1, ...V_t\}$:
   - **(a)** Draw textual word $w_i \sim \text{Bern}(f(\bar{\mathbf{z}}, A_i, \tau_i))$

Here $f(\bar{\mathbf{z}}, A_i, \tau_i)$ is a logistic regression function $f(\bar{\mathbf{z}}, A_i, \tau_i) = \sigma(A_i^T \bar{\mathbf{z}} + \tau_i)$, where A_i is a V_t dimensional vector of regression coefficient, τ_i is a regularization constant for A_i, $\sigma(x) = 1/(1 + \exp(-x))$. "Bern" means Bernoulli distribution.

Different from LDA based models, in corrCTM and sCTM-bin, topic correlation is first incorporated in prior multivariate covariance Σ, then topic proportions θ_i, θ_j of an image are generated relying on Σ through logistic normal process $f(\theta)$. Moreover, later topic assignment for image features and annotation words would subsequently depend on the correlated mixture of topic proportions, by means of building topic correspondence (C-type) or regression from empirical topic proportions (R-type).

3.2. General framework for variational inference

To simplify the formulation, from the graphical representations in Fig. 3, we use Ψ short for model parameters (Ψ denotes $\{\mu, \Sigma, \pi, \beta\}$ in corrCTM, and $\{\mu, \Sigma, \pi, A, \tau\}$ in sCTM-bin), Δ for latent variables (Δ represents $\{\theta, z, y\}$ in corrCTM, and $\{\theta, z\}$ in sCTM-bin). In learning, our goal is to maximize the lower boundary of log joint likelihood of observed image-word pair $\{\mathbf{v}, \mathbf{w}\}$,

$$\log p(\mathbf{v}, \mathbf{w}|\Psi) \geq \mathcal{L}(\Omega; \Psi), \tag{1}$$

where Ω contains variational parameters approximated to latent variables in Δ. We utilize variational EM framework

to maximize $\mathcal{L}(\Omega;\Psi)$. In E step, we approximate variational parameters Ω to lower bound the marginal likelihood , then maximize the lower boundary in M step to obtain model parameters Ψ. Due to the space of limitation, we shall omit deriving details for each of the variational parameters. We will supply a technical note with this paper online for completeness. Here, we emphasize the update rules of specific variational parameters that are different from LDA based models: γ, ν for θ, ϕ for z, and model parameters μ, Σ.

E-step: For each image, optimize values for variational parameters in Ω. The update rules of γ, ν, ϕ which differ from LDA based models are

$$\frac{\partial \mathcal{L}}{\partial \gamma} = -\Sigma^{-1}(\gamma-\mu) + \sum_{m=1}^{M}\phi_{mi} - \frac{M}{\zeta}\exp\left(\gamma+\nu^2/2\right), \quad (2)$$

$$\frac{\partial \mathcal{L}}{\partial \nu_i^2} = -\Sigma_{ii}^{-1}/2 - (M/2\zeta)\exp\left(\gamma_i+\nu_i^2/2\right) + 1/(2\nu_i^2), \quad (3)$$

$$\hat{\phi_{mi}} \propto \pi_{i,v_m}\exp\left(\gamma_i + \sum_{n=1}^{N}\lambda_{nm}\log\beta_{i,w_n}\right), \quad (4)$$

$$\begin{aligned}\hat{\phi_{mi}} \quad \propto \quad & \pi_{i,v_m}\exp\Bigg[\gamma_i + \sum_{j=1}^{V_t}\Bigg(\frac{\lambda(\xi_j)}{2M}A_j - \frac{\lambda(\xi_j)}{M^2}\mathrm{diag}(A_jA_j^T) \\ & + 2A_jA_j^T\sum_{n\neq m}\phi_{ni}\Bigg)\Bigg], \quad (5)\end{aligned}$$

where i is topic index. Intermediate variables such as ζ, ξ, $\lambda(\xi)$ are same as [3, 4], and the other variational parameters specific in corrCTM and sCTM-bin follow the similar iteration rules in [3, 4]. Update rule of ϕ_{mi} in Equation 4 is for corrCTM and in Equation 5 for sCTM-bin.

M-step: For all images in training set, to estimate model parameter Ψ, maximize lower boundary of summational log likelihood $\sum_{d=1}^{D}\mathcal{L}_d(\Omega_d;\Psi_d)$ for all D images, given Ω_d obtained from E-step. The update rules of μ, Σ different from LDA based models are

$$\hat{\mu} = (1/D)\sum_{d=1}^{D}\gamma_d, \quad (6)$$

$$\hat{\Sigma} = (1/D)\sum_{d=1}^{D}\left(I\,\nu_d^2 + (\gamma_d-\hat{\mu})(\gamma_d-\hat{\mu})^T\right), \quad (7)$$

where d is image index in training set. The other model parameters such as π, β in corrCTM, and π, A, τ in sCTM-bin follow the similar iteration rules as [3, 4].

Unlike in LDA based models Dirichlet is conjugate with multinomial, here logistic normal is nonconjugate with multinomial in CTM based models. Thus, variational updates for γ in Equation 2, and ν in Equation 3 are not closed-form. In practice, we use LBFGS[1] to update γ and constrained Newton's method to update ν .

Observe in Equation 4 and 5 that how the per-feature variational distribution over topics ϕ_{mi} depends on variational hyper parameter γ_i and ν_i of different topic proportions. Since variance ν_i is derived from prior covariance matrix Σ, the covariance structure Σ controls topic proportions of each image, and different topic components assigned to feature point (ϕ_{mi}) would be correlated.

The procedure for predicting annotations is similar with [3, 4], given an unknown image, we perform variational inference by fixing model parameters Ψ, to obtain variational parameters Ω for the image. Finally, we rank the conditional probability of annotation words over feature points $p(w_i|\mathbf{v};\Omega,\Psi), i\in\{1,...,V_t\}$ to get top-rank words.

4. EXPERIMENTS

4.1. Data configuration

We evaluate our models for image annotaiton on three benchmark datasets: LabelMe [6], PASCAL VOC07 [14] and Corel 5K. To be consistent with previous works [3, 4, 5], we prune the original datasets.

[LabelMe] We preserve the orginal 8-category subset which contains 2,687 images (2,149 for training, 538 for testing). Removing annotation words occurs less than 3 times, we get a word dictionary with 136 entries.

[PASCAL VOC07] For this 20-category dataset, after removing the words that appears less than 5 times, we obtained a refined dataset contains 6,200 images (4,340 for training, 1,860 for testing) with 186 words.

[Corel 5K] As Corel 5K is a copyright dataset, we just use the public statistic[2] and evaluate the annotation performance. This dataset includes 5,000 images (4,500 for training, 500 for testing) and 260 words.

Following the setting in [3, 4, 5], we use 128-dimensional SIFT descriptor on 20×20 gray-scale patches. We build codeword dictionaries by K-means algorithm: for both LabelMe and PASCAL VOC07, the size is 500, for Corel 5K the size is 1000.

To make the model comparison reasonable, except for corrCTM and sCTM-bin described in Section 3, we also develop trmmCTM from trmmLDA [5] following the same methodology in Section 3, thus we have three CTM based models in total. We implement these CTM based models in Matlab platform. To train these models, we set the stopping criteria for log likelihood change is less than 0.001%, and max iterations 20 for variation inference, 100 for parameter estimation.

[1] http://www.caam.rice.edu/~heinken/
[2] http://lear.inrialpes.fr/data/

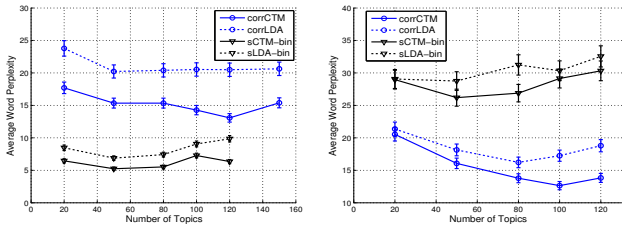

(a) LabelMe (b) PASCAL VOC07

Fig. 4. Word perplexity of CTM based and LDA based models on datasets: (a)LabelMe, (b)PASCAL VOC07.

4.2. Word Perplexity

To measure the quality of annotation words predicted by models, we follow [1, 3, 4, 5] and select *word perplexity* as a performance measure. The word perplexity $\mathcal{P}(word)$ denoted in Equation 8 represents that how well model predicts the conditional probability $p(\mathbf{w}|\mathbf{v})$ for all images in testing set. A lower perplexity score indicates better predictive performance of model.

$$\mathcal{P}(word) = \exp\left(-\frac{\sum_{d=1}^{D}\sum_{n=1}^{N_d}\log p(w_n|\mathbf{v}_d)}{\sum_{d=1}^{D} N_d}\right) \quad (8)$$

As seen in Fig. 4, both corrCTM and sCTM-bin give lower perplexity score compared to their LDA based versions corrLDA and sLDA-bin for different number of topics. We address the superior predictive capabilities of capturing topic correlation, propagating this correlation to build correspondence between topics and words in C-type models, or to perform regression from topics to words in R-type models. These capabilities are also hinted in previous exemplars Fig. 1 and Fig. 2.

4.3. Annotation Evaluation

Previous works [3, 4, 5, 7] rarely provide comprehensive statistic of annotation performance by modern measures, resulting in ambiguous judgement. To supply an objective statistic for intuitional evaluation, we adopt popular measures which are widely used in recent works [8, 11, 12]. Specifically, we use 4 criteria: 1) percentage mean precision **P**, 2) percentage mean recall **R**, 3) **F1** score $F1 = 2.P.R/(P+R)$, 4) total recalled words count **N+**. We compare three CTM based models with their LDA based versions. To present their best performance, we adopt optimal topic numbers for each of them through cross validation. And for each test image, we select top-5 words predicted by each model.

Table 1 summarizes the overall evaluation from our results as well as those reported by previous models for image annotation on three datasets. We can see that on most of measures, the CTM based models defeat their LDA based versions, on all three datasets. Precisely, for LabelMe, PASCAL VOC07, Corel 5K datasets, corrCTM improves corrLDA 3.03%, 0.85%, 2.03% on F1 score and 11, 5, 12 on $N+$, sCTM-bin outperforms sLDA-bin for 3.54%, 2.74% , 4.22% on F1 score, 4, 6, 2 on $N+$, and trmmCTM is comparative with trmmLDA on F1 and $N+$. In general, we gain 3.54%, 0.85%, 2.03% in term of F1 score, and 8, 5, 4 with regards to $N+$ comparing the best results from both sides of CTM based models and LDA based models on three datasets respectively.

It is notable that the compositions of dataset such as variety of image contents, balance of image counts and word counts, highly impact the different types of models. We found that R-type (sLDA-bin, sCTM-bin) models is better on uniform dataset LabelMe, in which the regression for topic-word seems to be robust, but more word counts will reduce the regression efficiency. On the other hand, C-type (corrLDA, corrCTM, trmmLDA and trmmCTM) models which build correspondence between topic-word support larger number of topics , and do not easily suffer from over fitting on datasets, e.g. PASCAL VOC07, Corel 5K, which contain more various image content and annotations.

Fig. 5 demonstrates some exemplar annotation results from our CTM based models. In most scenarios, annotations predicted by CTM based models are more related to the content of image and ground truth annotations, while LDA based models incline to prefer weird words (e.g. boat, train, bird, snow) which are actually irrelevant to image content.

5. CONCLUSION

We have developed a series of CTM based topic models to capture topic correlation, and we provide a thorough comparison between CTM based and previous LDA based models on annotation performance. It indicates that modeling topic correlation could benefit annotation, and CTM based models have either superior or competitive annotation results compared with LDA based models depending on specific dataset. In addition, more co-occurred words can be recalled by CTM based models through modeling topic correlation. However, the computation of estimating model parameters μ, Σ in CTM based models are more complex, and the approximation for variational parameters are sometimes numerical unstable in practice. Therefore, it remains a challenge to apply the CTM based model on large-scale datasets, e.g, ESP Game, IAPR TC-12. And this would be a primary issue of our future work.

6. REFERENCES

[1] D.M.Blei, A.Y.Ng, and M.I.Jordan, "Latent dirichlet allocation," *JMLR*, pp. 993–1022, 2003.

[2] D.M.Blei and J.D.Lafferty, "Correlated topic models," in *NIPS*, 2006.

Table 1. Comparison of annotation performance between proposed CTM *vs.* previous LDA based models. Promising results in both parts are highlighted in bold.

	LabelMe					PASCAL VOC07					Corel 5K				
Method	K[3]	P	R	F1	$N+$	K	P	R	F1	$N+$	K(L)[4]	P	R	F1	$N+$
corrLDA [3]	50	43.6	34.4	38.46	54	80	17.8	27.9	21.28	49	80	24.9	35	29.09	53
sLDA-bin [4]	50	44.6	35.3	39.4	57	50	12.2	22	15.69	31	80	17.5	25.8	20.85	74
trmmLDA [5]	-	-	-	-	-	-	-	-	-	-	100(50)	27.4	40.4	**32.65**	72
corrCTM	120	46.9	37.2	41.49	**65**	100	18.3	28	**22.13**	**54**	120	26.7	37.3	31.12	65
sCTM-bin	50	48.7	38.4	**42.94**	61	50	14.5	25.3	18.43	37	80	21	31.1	25.07	**76**
trmmCTM	-	-	-	-	-	-	-	-	-	-	80(50)	27.1	39.5	32.15	68

Ground truth	sky, trees, brushes, field	sand, beach, mountain, sea, water	bus, buildings, red	airplane, green, sheep, fence, farm
corrLDA	sky, trees, mountain, rock, water	sky, water, river, mountain, clouds	bus, buildings, street, motorcycle, station	airplane, bird, sheep, stone, snow
sLDA-bin	trees, buildings, ground, road, clouds	coast, sun, boat, stone, shrub	truck, train, station, railway, motor	horse, cow, house, mountain, snow
corrCTM	sky, trees, clouds, grass, field	sea, water, sand, beach, coast	bus, buildings, street, window, shop	airplane, trees, sheep, green, farm
sCTM-bin	sky, trees, plants, field, hill	sea, water, sky, beach, sand,	bus, car, buildings, street, red	clouds, fence, sheep, farm, home

Fig. 5. Annotations for exemplar images: left two images are from LabelMe, right two images are from PASCAL VOC07.

[3] D.M.Blei and M.I.Jordan, "Modeling annotated data," in *ACM SIGIR*, 2003.

[4] D.Putthividhya, H.T.Attias, and S.S.Nagarajan, "Supervised topic model for automatic image annotation," in *ICASSP*, 2010.

[5] D.Putthividhya, H.T.Attias, and S.S.Nagarajan, "Topic regression multi-modal latent dirichlet allocation for image annotation," in *CVPR*, 2010.

[6] B. C. Russell, A. Torralba, K. P. Murphy, and W. T. Freeman, "Labelme: a database and web-based tool for image annotation," *IJCV*, pp. 157–173, 2008.

[7] C.Wang, D.M.Blei, and Fei fei Li, "Simultaneous image classification and annotation," in *CVPR*, 2009.

[8] D. Grangier and S. Bengio, "A discriminative kernel-based model to rank images from text queries," *TPAMI*, 2008.

[9] Rong Jin, Shijun Wang, and Zhi-Hua Zhou, "Learning a distance metric from multi-instance multi-label data," in *CVPR*, 2009.

[10] Yu Xiang, Xiangdong Zhou, Tat-Seng Chua, and Chong-Wah Ngo, "A revisit of generative model for automatic image annotation using markov random fields," in *CVPR*, 2009.

[11] Matthieu Guillaumin, Thomas Mensink, Jakob J. Verbeek, and Cordelia Schmid, "Tagprop: Discriminative metric learning in nearest neighbor models for image auto-annotation," in *ICCV*, 2009.

[12] Yashaswi Verma and C. V. Jawahar, "Image annotation using metric learning in semantic neighbourhoods," in *ECCV*, 2012.

[13] Shaoting Zhang, Junzhou Huang, Yuchi Huang, Yang Yu, Hongsheng Li, and D.N. Metaxas, "Automatic image annotation using group sparsity," in *CVPR*, 2010.

[14] M. Everingham, L. VanGool, C.K.I. Williams, J. Winn, and A. Zisserman, "The pascal visual object classes challenge 2007 (voc2007) results," .

[3] K: optimal topic number K for both features and words in corrLDA, corrCTM, sLDA-bin and sCTM-bin.

[4] K(L): optimal topic number for features K and words L in trmmLDA and trmmCTM.