EEE 316 – Power Electronics Laboratory
Level-3 Term-2 Section: C2
Project Presentation

Design and Implementation of a H bridge DC to AC Inverter

Submitted By – Group C2.03

Tonmoy Deb
2106177

Mushfiqur Rahman
2106181

Chayan Paul
2106182

Shamin Yeaser
2106183

Kayes Sami Malitha
2106184

Bangladesh University of Engineering and Technology
Department of Electrical and Electronic Engineering

1. Introduction

Need for DC to AC conversion in electronics

Conventional systems → **complex & costly**

Proposed system:

- **DC–AC sine wave inverter**
- **Achieve stable 50Hz output**
- **Low cost portable system**
- **SPWM controlled(EGS002)**

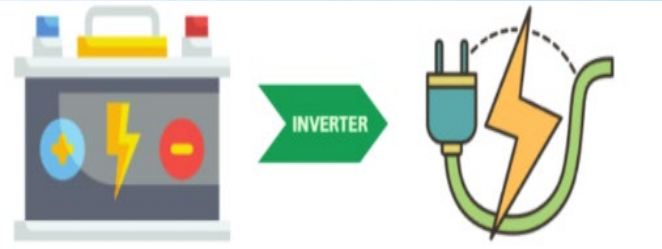

1. System Block Diagram

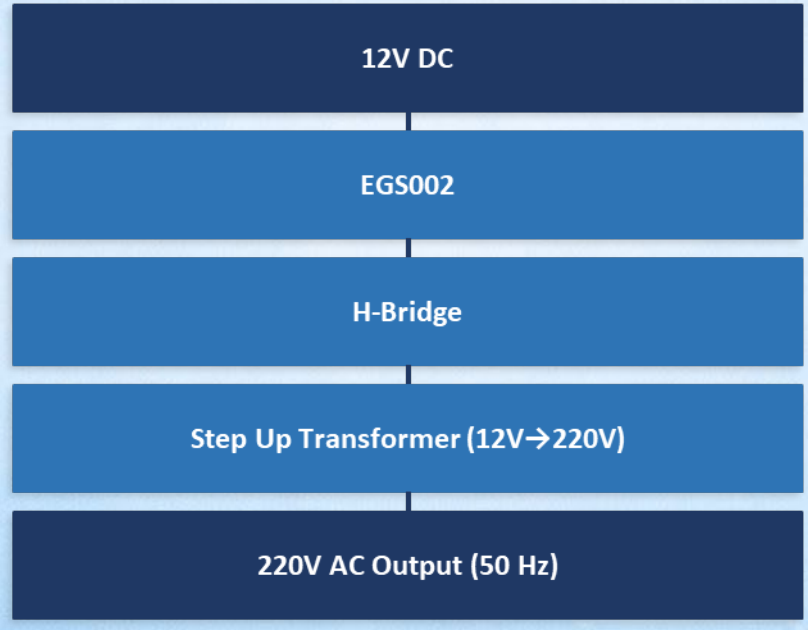

Theory Analysis :

> A 23.4 kHz triangular carrier is continuously compared with a 50Hz sinusoidal modulating reference.

>When the sine reference exceeds the carrier amplitude, the comparator drives the output HIGH.

>This generates a pulse train whose duty cycle varies sinusoidally.

>A low-pass filter attenuates switching harmonics, recovering the 50Hz fundamental.

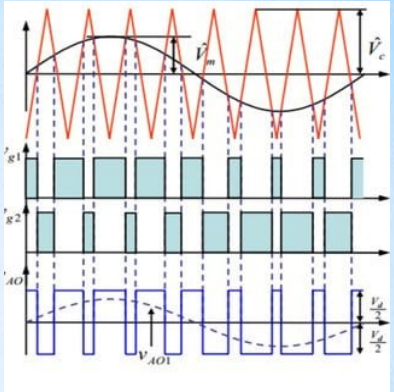

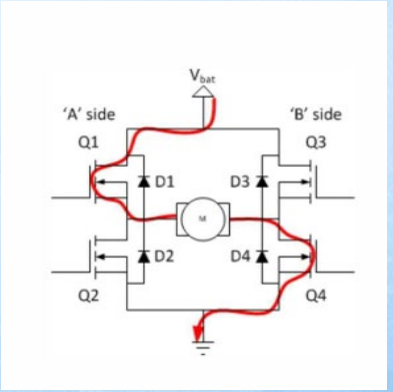

Simulation

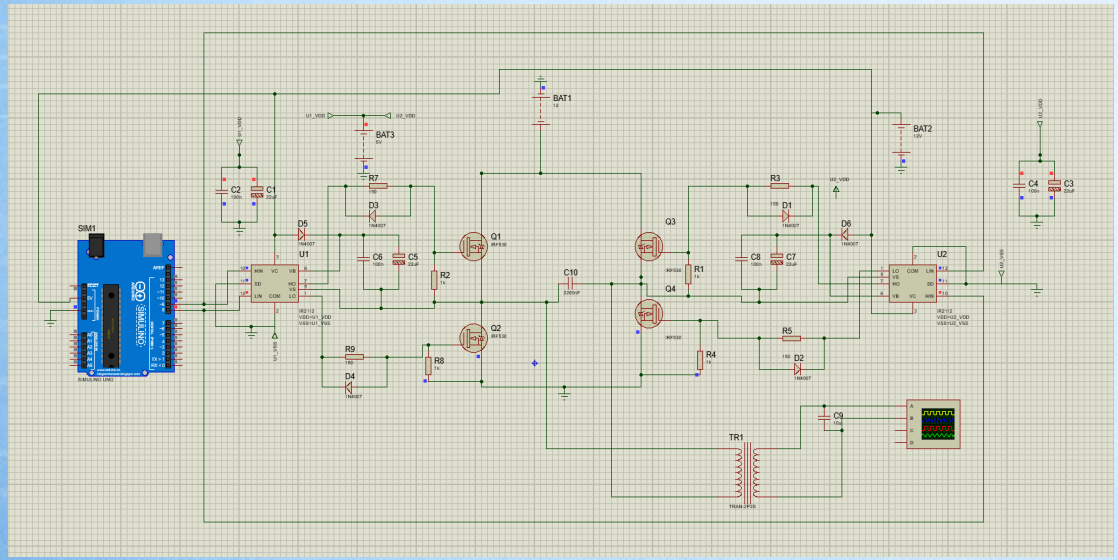

Simulated circuit

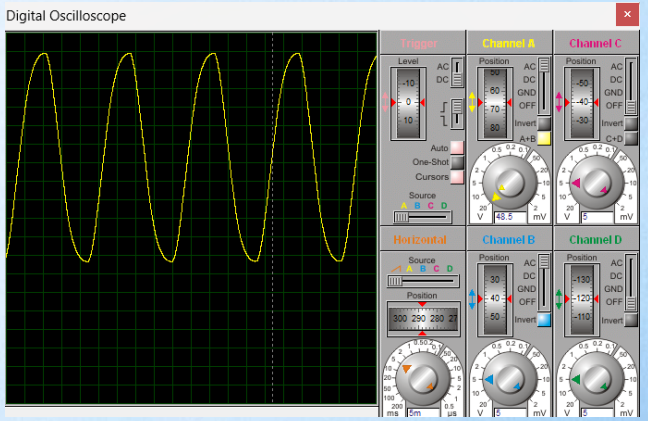

Simulated output voltage

Veroboard Diagram :

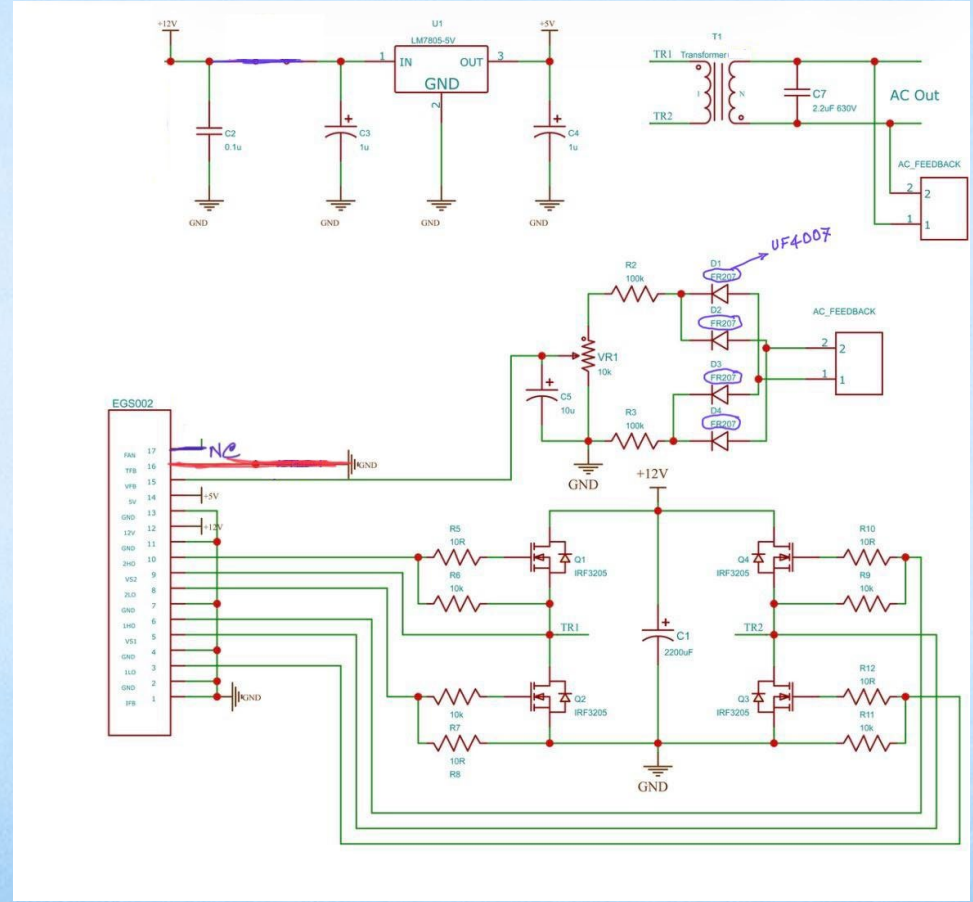

2. Hardware Design

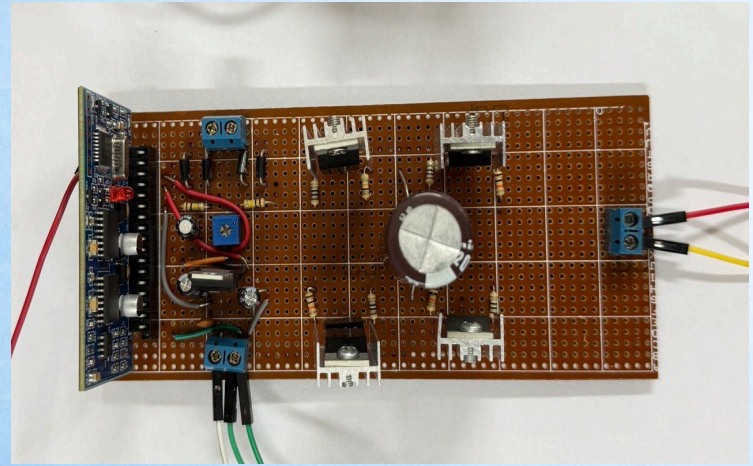

Veroboard Implementation

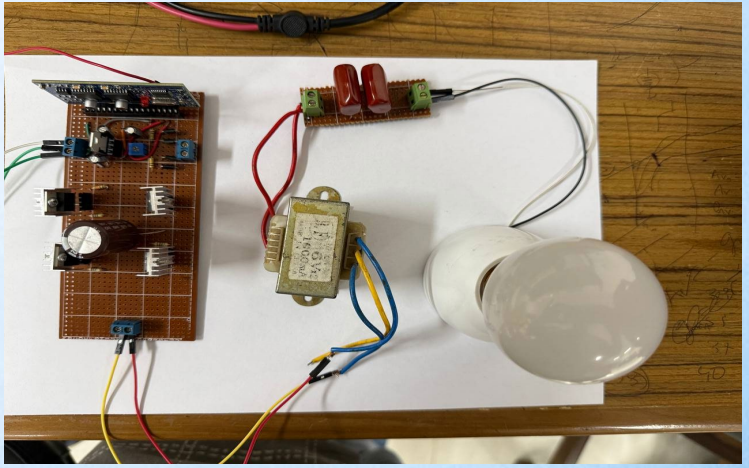

Complete circuit

5. Demonstration

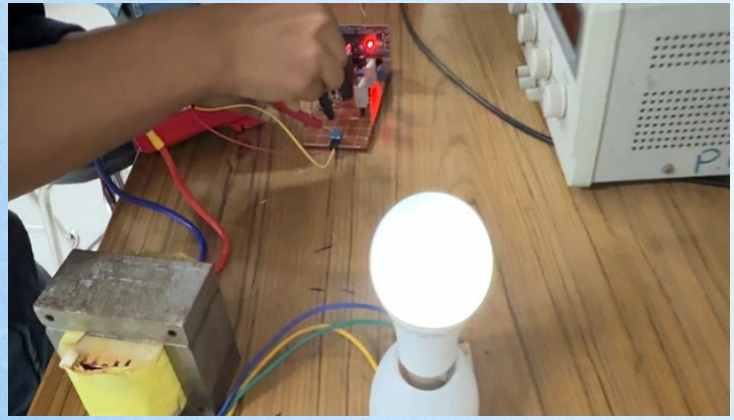

Output load

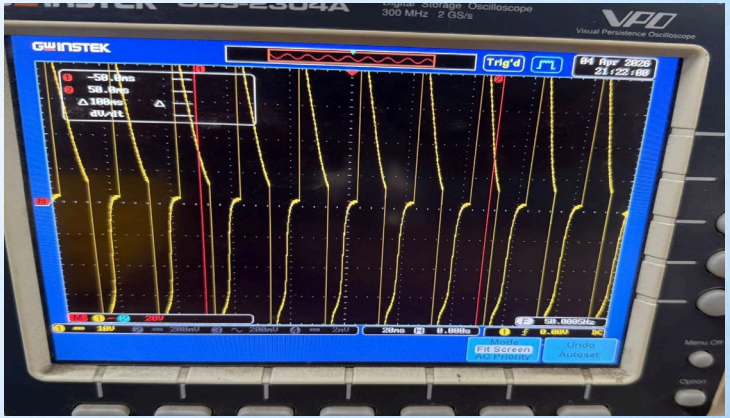

Oscilloscope Result

Gate pulse checking :

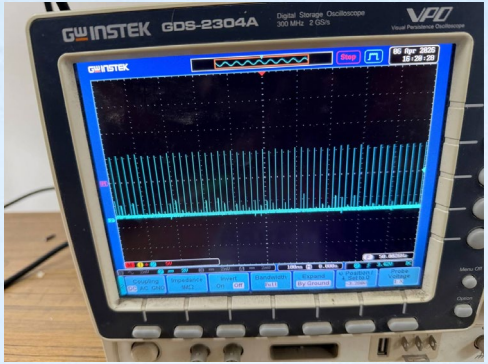

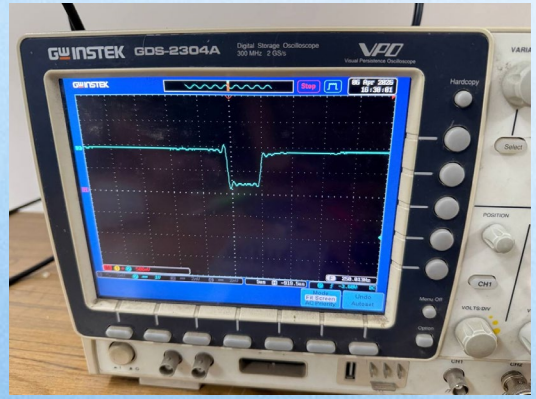

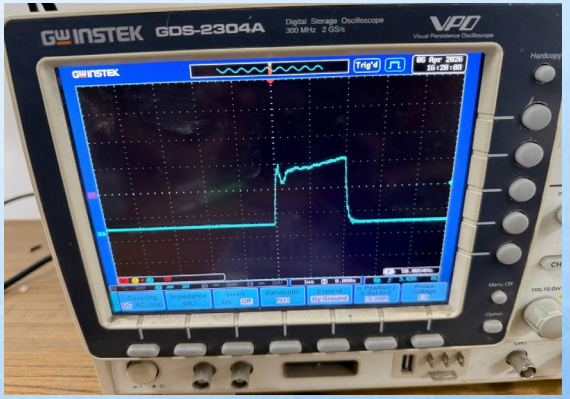

Result Analysis

Efficiency :

Input DC Voltage Vs= 12V

Input Current Is = 1.45A

Input Power Pin = Vs*Is = 17.4 W

Output Voltage Vo with load = 63.3V

Load Ratings : P=5W, V=220V

For output resistance = $\frac{V^2}{\mathrm{P}} = 9680$ ohm

Output Current Io = 0.02273 A

Output Power Po = Vo*Io = 1.4369W

Efficiency η = Po/Pin = 0.08258 =8.258%

Result Analysis

- MOSFET Conduction Loss

$$P_c=(Id)^2*Rds(on)$$

- Transformer Loss
- Switching Loss

$$P_s=0.5*Vin*Id$$

- Gate Driver Loss

Limitations of Tools

o Transformer generates and core losses resulting low output voltage in HT side during full load condition. It also limits the maximum power output and reduces overall system efficiency.

o A standard digital multimeter cannot accurately measure the very fast, high-frequency voltage changes (ripples) happening in the circuit.

THANK YOU