Intelligent Systems,
MIPT

Natural Language Processing

L5 / 10.03.26

- Course page
- GitHub

Content

Lecture 5: LLM pretrain

- language modeling task
- training recipe
- data processing
- current trends

What is the LLM?

Language modeling is the task of learning a probability distribution over token sequences: $P_\theta(x_1, \ldots, x_T)$

In practice, this distribution is usually factorized autoregressively:

$$P_\theta(x_1, \ldots, x_T) = \prod_{t=1}^{T} P_\theta(x_t \mid x_{<t})$$

Training is typically performed by minimizing the negative log-likelihood (equivalently, cross-entropy) over a text corpus:

$$\mathcal{L}_{\mathrm{LM}} = -\sum_{t=1}^{T} \log P_\theta(x_t \mid x_{<t})$$

Large Language Model **(LLM)** is a parametric language model with a very large number of parameters, trained on large-scale text data

Training Steps

Pretraining

- The model is initially trained to predict the next word in a sequence.
- During this process, it learns general knowledge and patterns about the world.

Supervised Fine-Tuning

- The model is further trained on labeled data to perform specific tasks such as answering questions, chatting, or writing code.
- In particular, *instruction tuning* improves the model's ability to follow user instructions.

Preference Tuning

- The model is optimized so that its responses better match human preferences and expectations.

Examples of Generations

Stage	Behavior
Pretraining	continues the text
SFT	answers the question
Preference tuning	makes the response more user-friendly

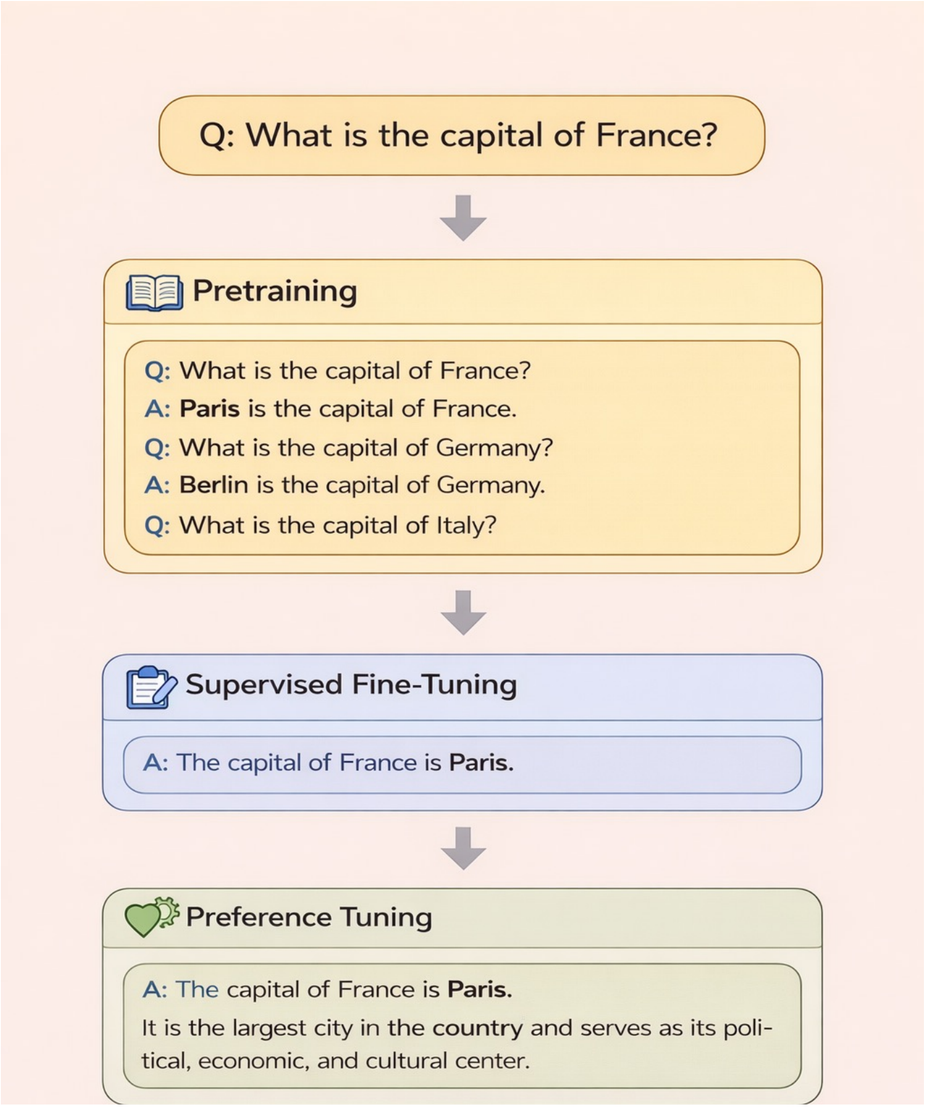

Recipe

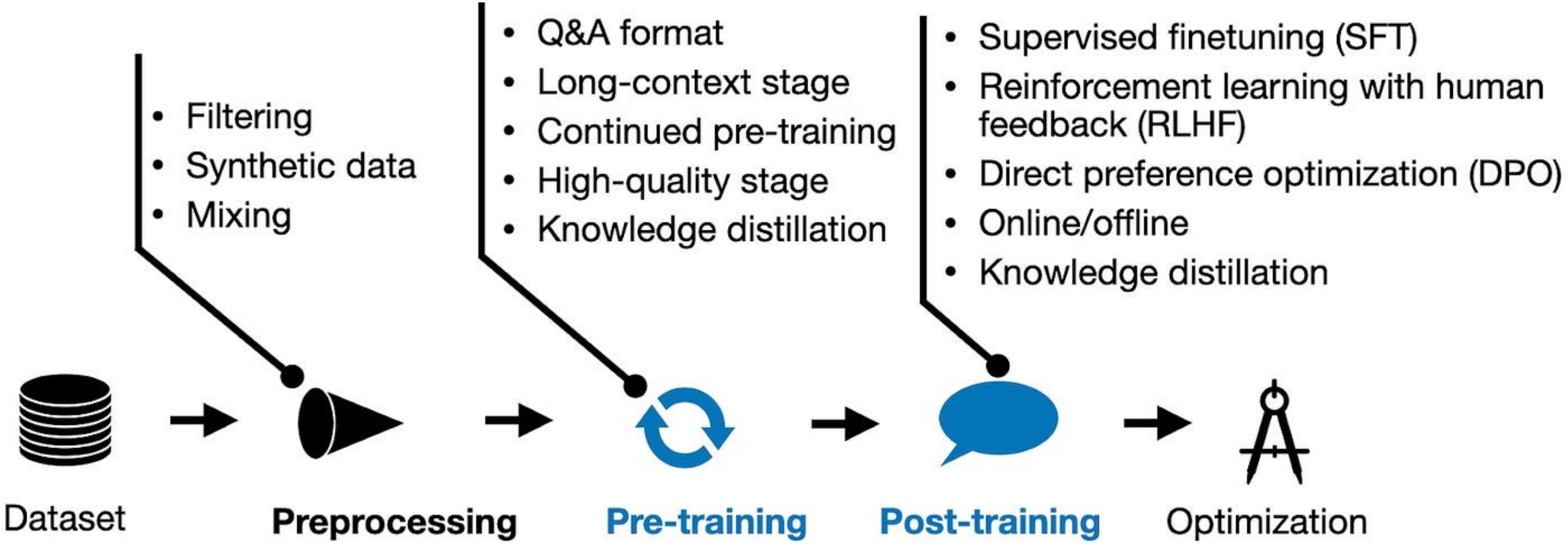
• Filtering
• Synthetic data
• Mixing
• Q&A format
• Long-context stage
• Continued pre-training
• High-quality stage
• Knowledge distillation
• Supervised finetuning (SFT)
• Reinforcement learning with human feedback (RLHF)
• Direct preference optimization (DPO)
• Online/offline
• Knowledge distillation
Dataset
Preprocessing
Pre-training
Post-training
Optimization

Why data preprocessing matters

- Data quality affects model quality no less than model size.
- Raw web data contains noise, duplicates, junk, test leaks, and *Personally Identifiable Information* (PII).
- A modern pipeline is not just text cleaning, but a full-fledged data curation system.

Goal: to increase the signal-to-noise ratio and make training more effective.

RAW Data Sources

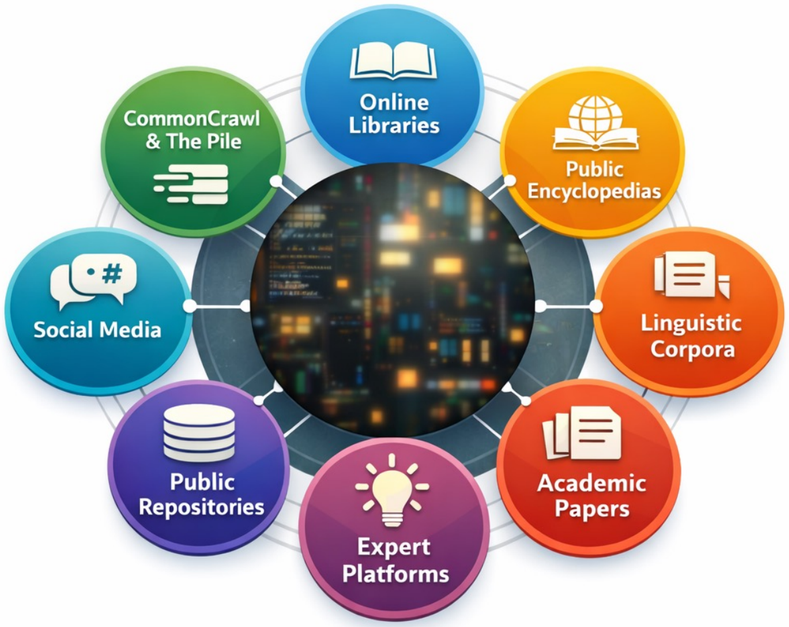

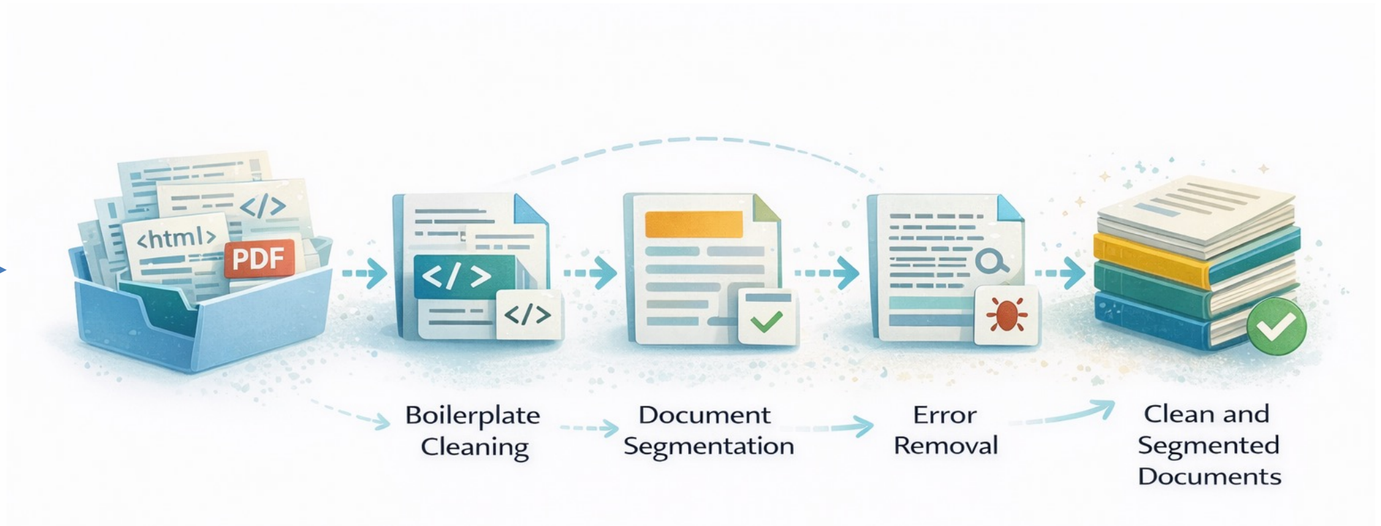

Preprocessing

Raw web-scale data is noisy, duplicated, multilingual, and often unsafe to use as-is.

A strong pretraining corpus is therefore not just collected, but carefully constructed through several filtering and balancing stages.

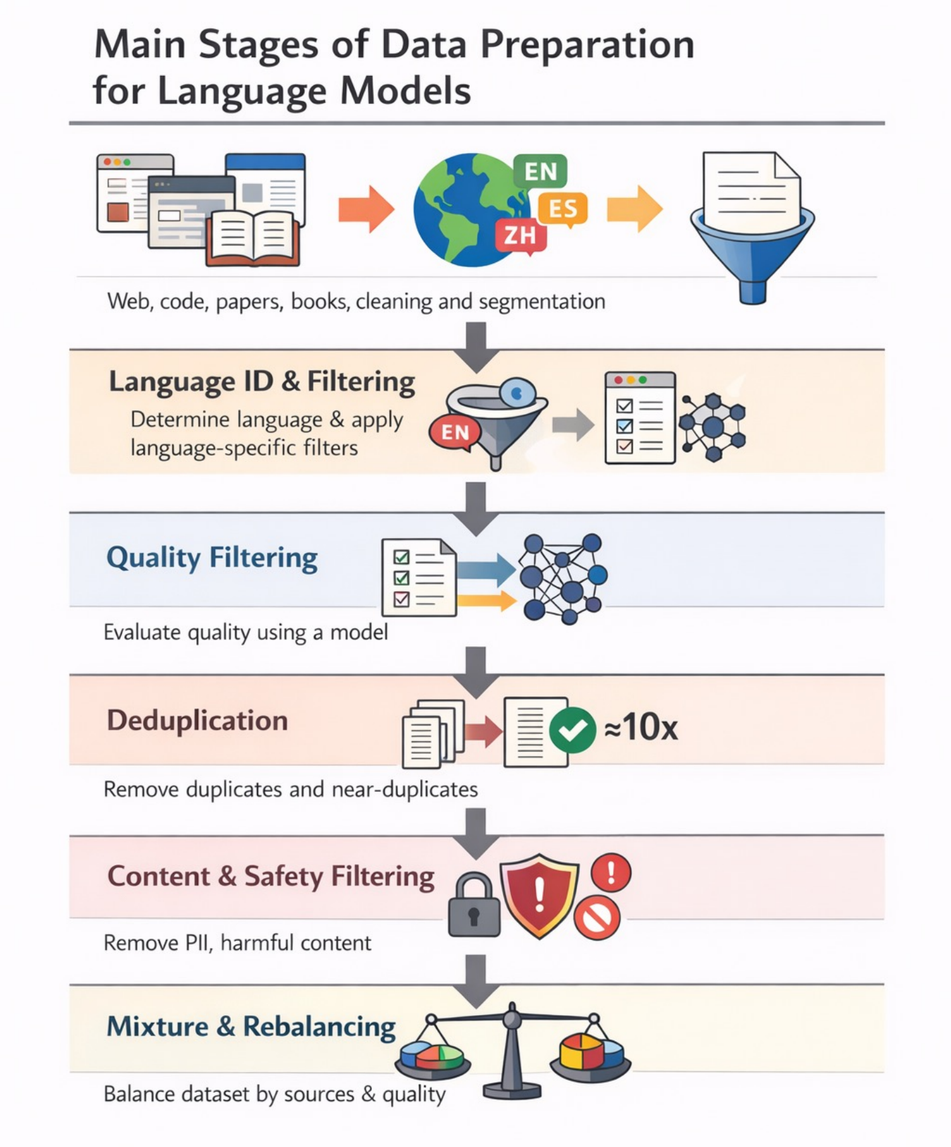

Architecture

BERT

Encoder

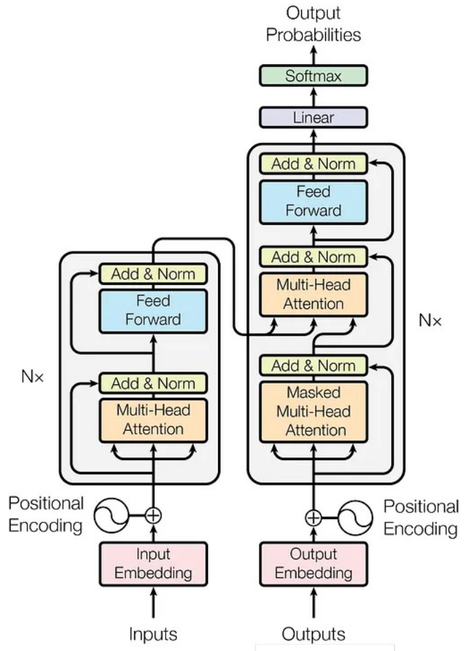

GPT

Decoder

OpenAI	GPT-5.4
Anthropic	Claude 4.6
Google	Gemini 2.5
XAI	Grok 3
DeepSeek	DeepSeek V3.2
Meta	LLaMA 4
Mistral	Mistral

link

Compute-optimal pretraining

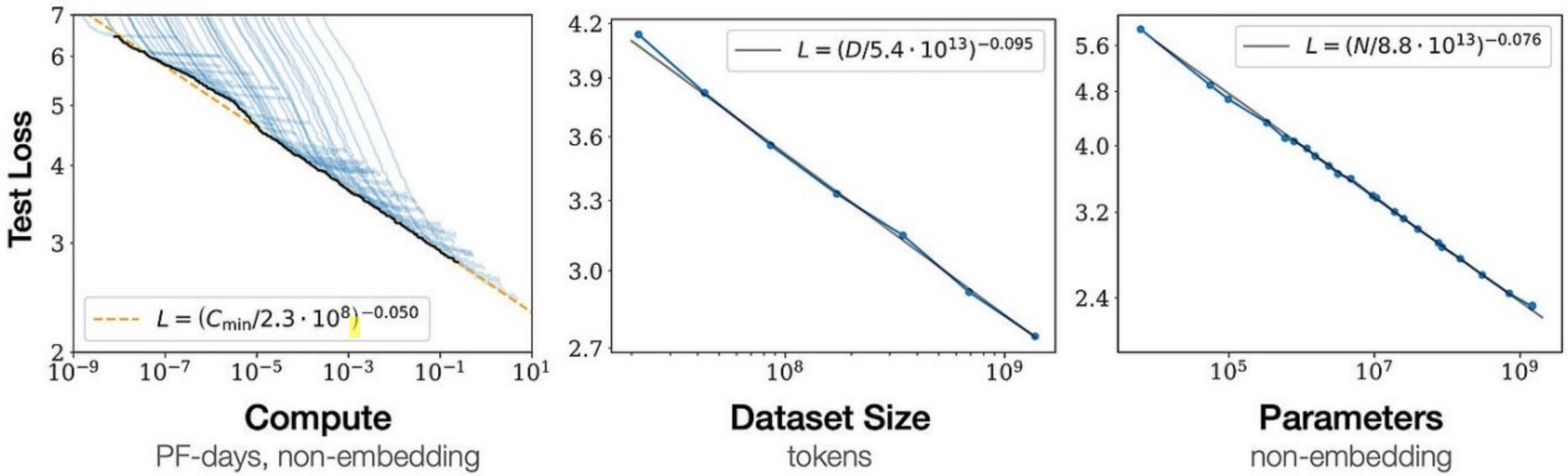

Figure 1 Language modeling performance improves smoothly as we increase the model size, datasetset size, and amount of compute[2] used for training. For optimal performance all three factors must be scaled up in tandem. Empirical performance has a power-law relationship with each individual factor when not bottlenecked by the other two.

Trends

- Stop increasing the model parameters;
- make inference cheaper;
- make data cleaner and better;
- learn long context;
- distillation;
- improve the speed of the training;
- explore training objective.

Next Token Prediction

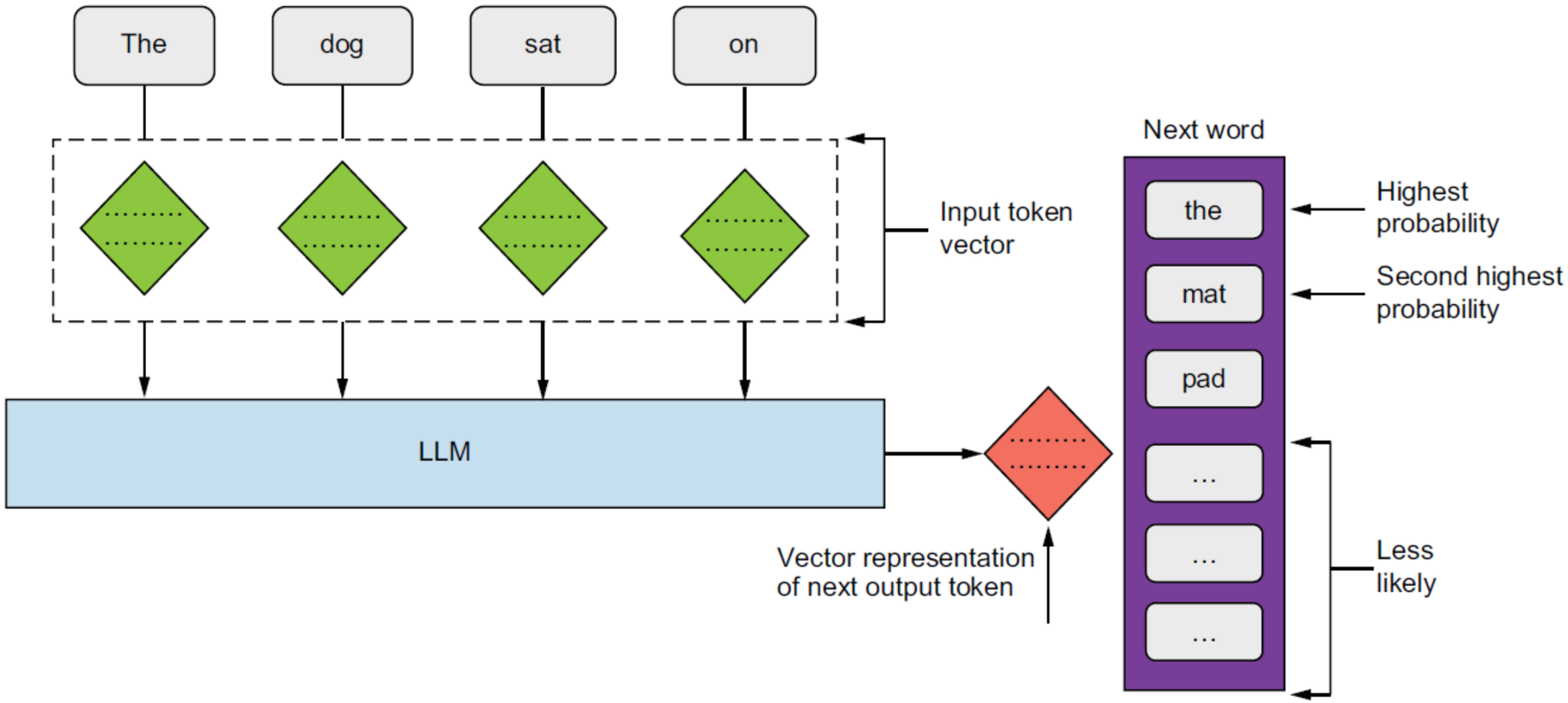

Multi-token prediction

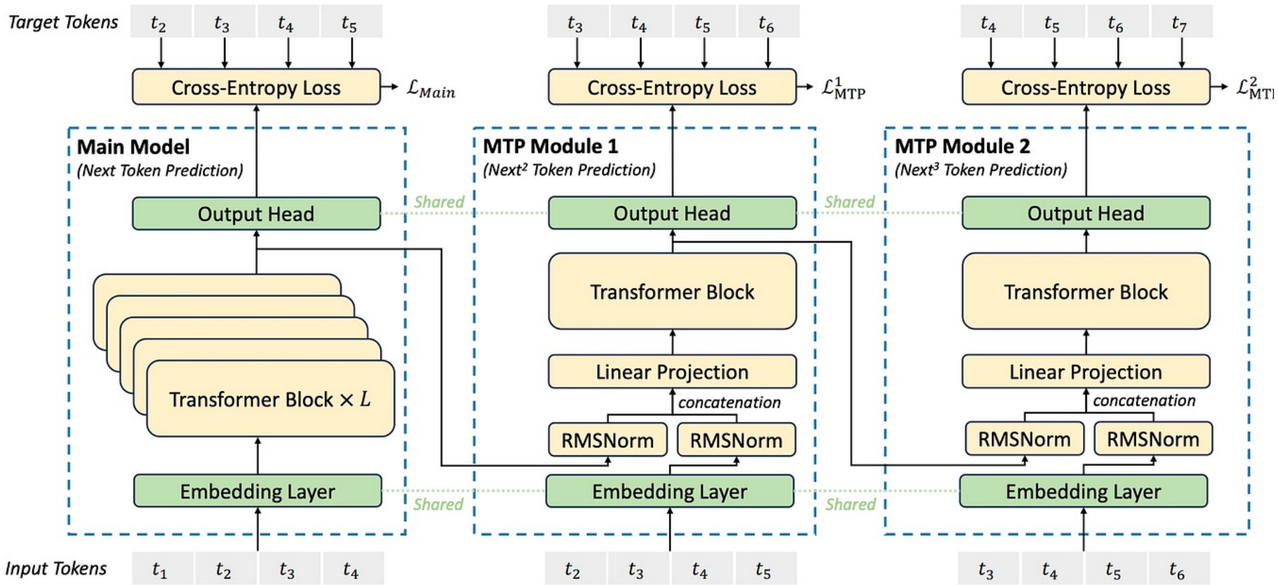

Sequential MTP

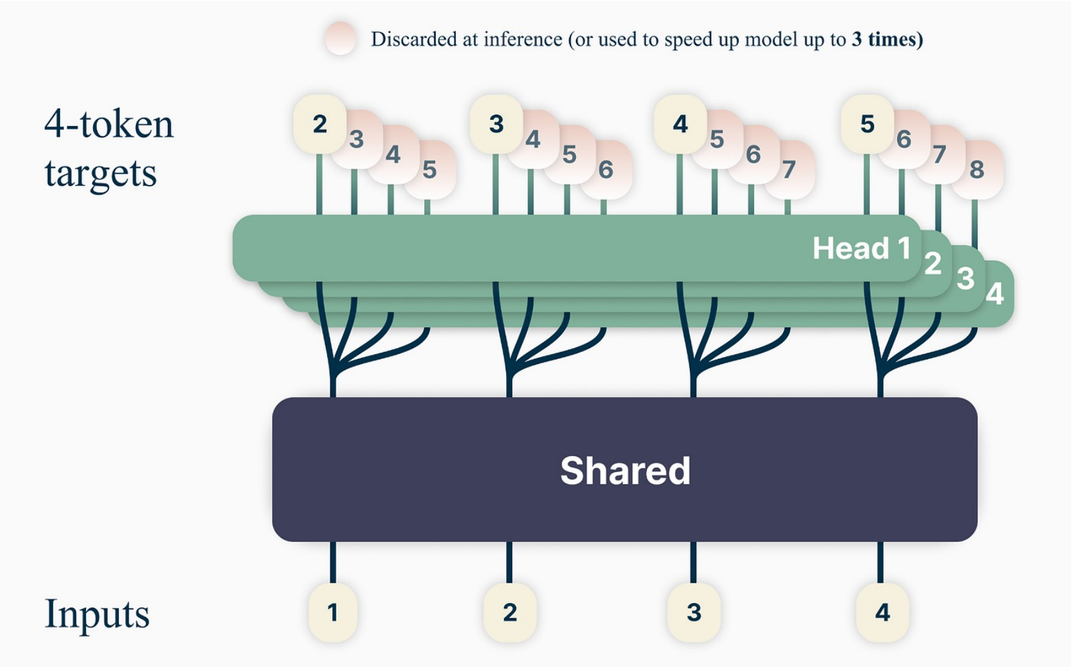

Independent MTP

Long context recipe

- Positional encoding scaling
- Long context attention architectures
- Staged context expansion
- Long-context data mix

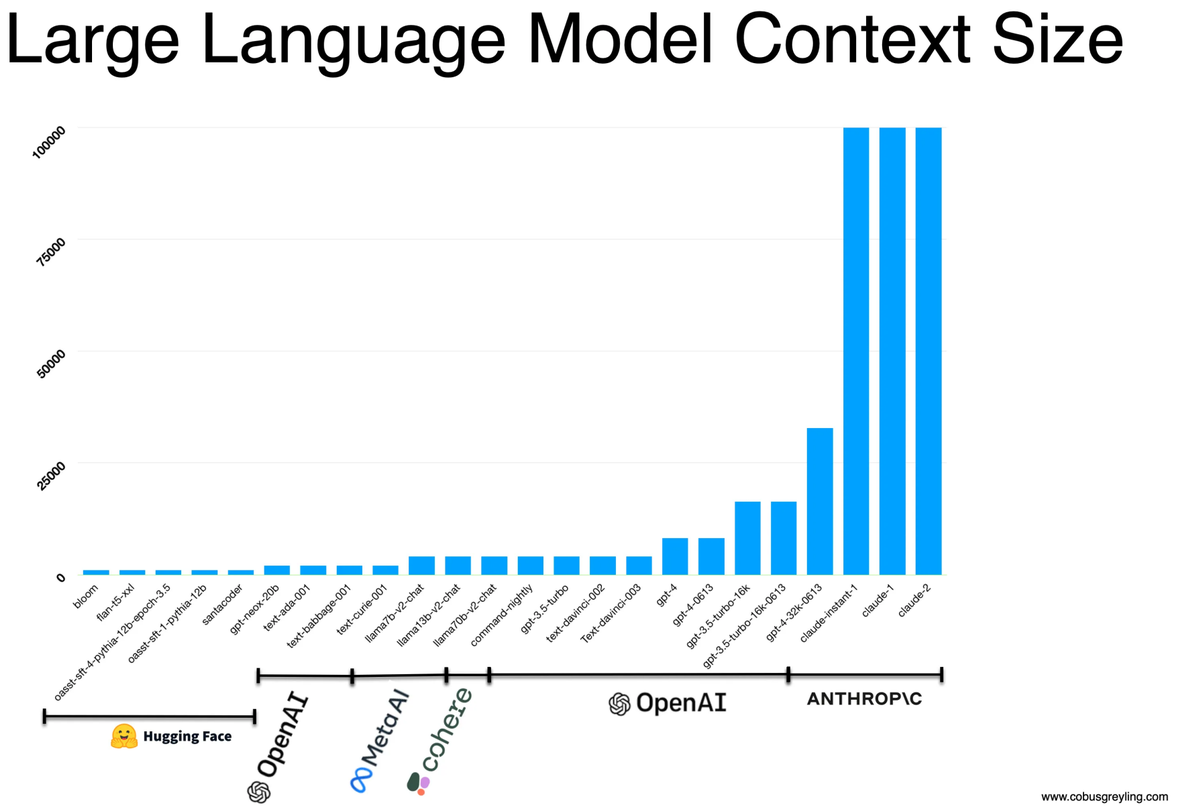

link

Absolute Positional Encoding

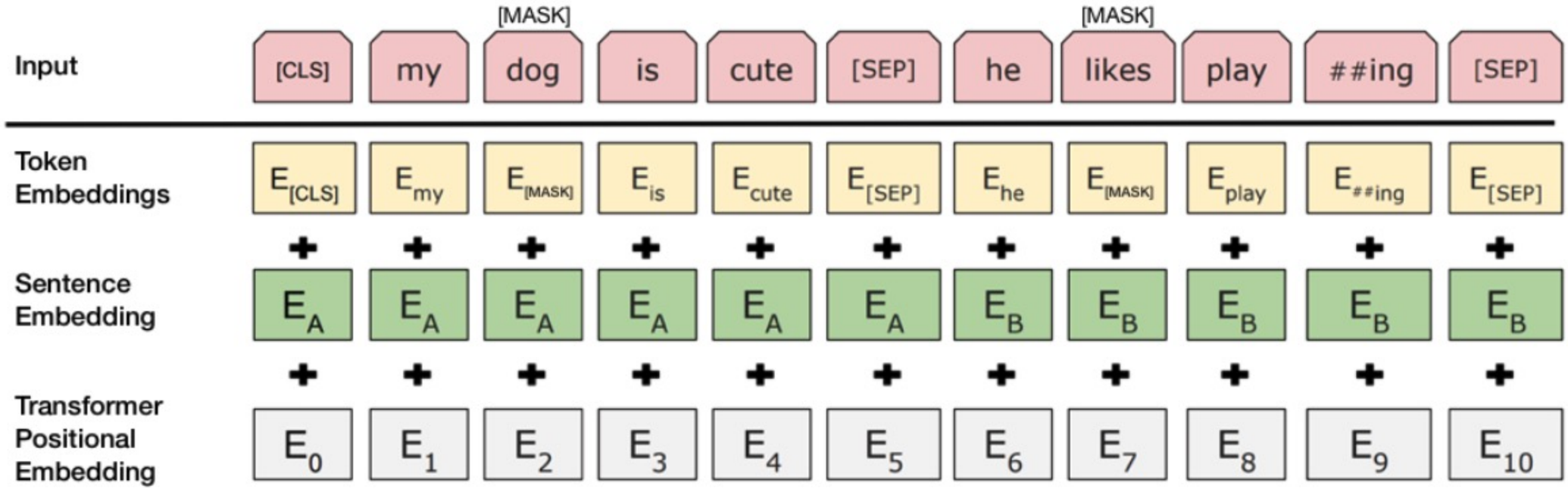

link

Rotary Positional Encoding

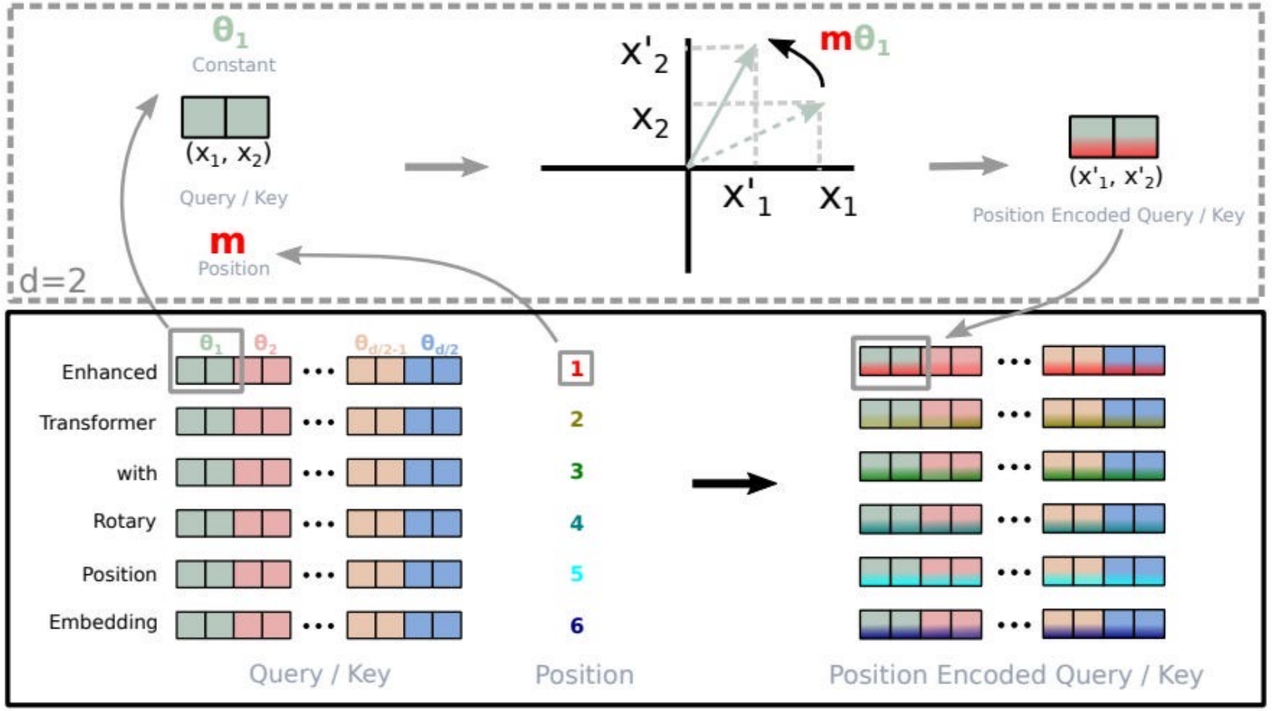

Figure 1: Implementation of Rotary Position Embedding(RoPE).

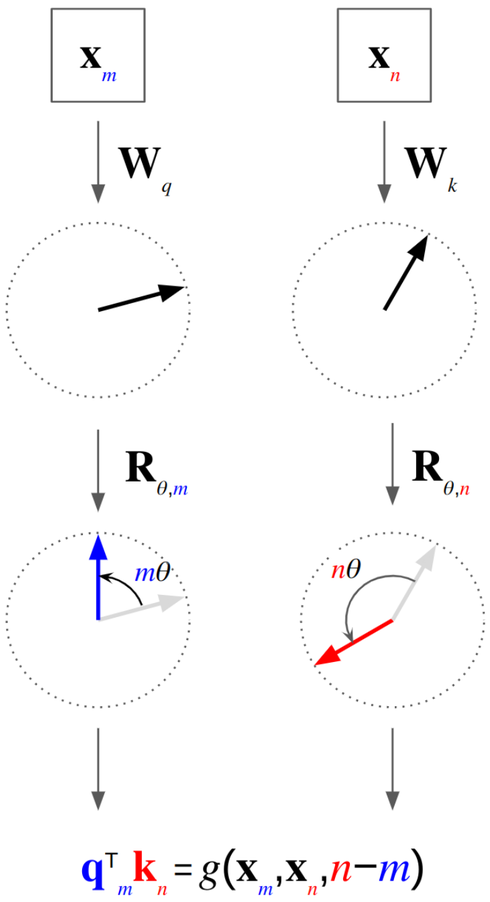

$$\mathbf{q}_m^\top \mathbf{k}_n = g(\mathbf{x}_m, \mathbf{x}_n, n-m)$$

Token representations at positions m and n

Non-rotated query and key (no position information)

Rotated query and key (*absolute* position information)

Inner product of query and key (*relative* position information)

link

Attention improvements

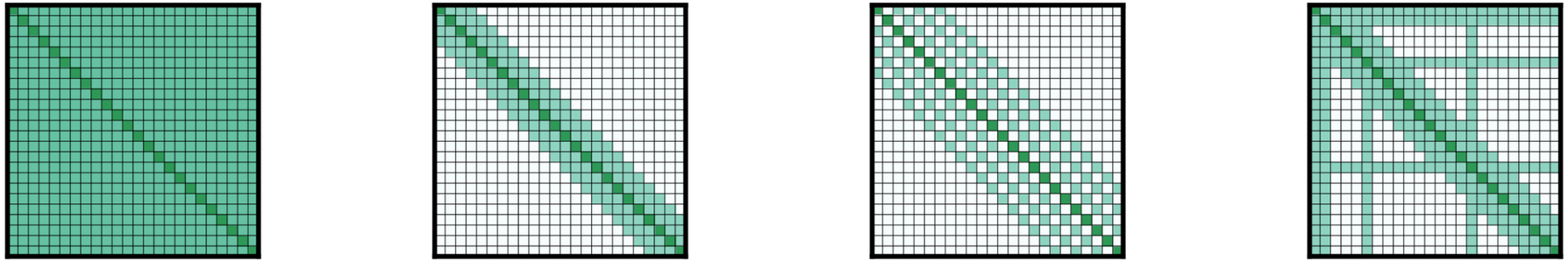

(a) Full n^2 attention (b) Sliding window attention (c) Dilated sliding window (d) Global+sliding window

Attention is calculated as O(nw) instead of O(n^2), where w is the window size and n is the sequence length.

BigBird

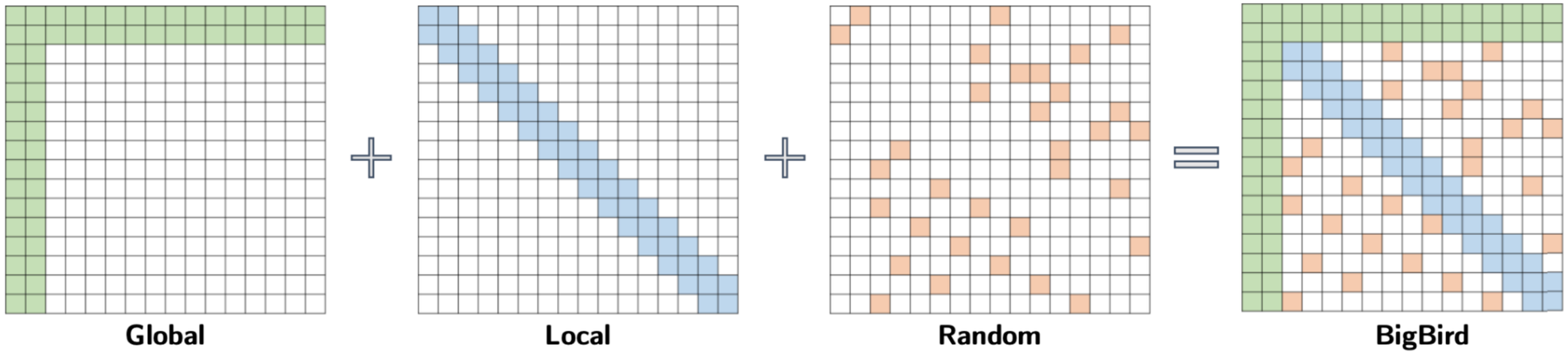

linkhttps://arxiv.org/abs/2007.14062

Ring Attention

- Allows you to work with very long contexts
- Does not remove the quadratic nature of attention according to FLOPs
- Expensive inter-GPU communication appears

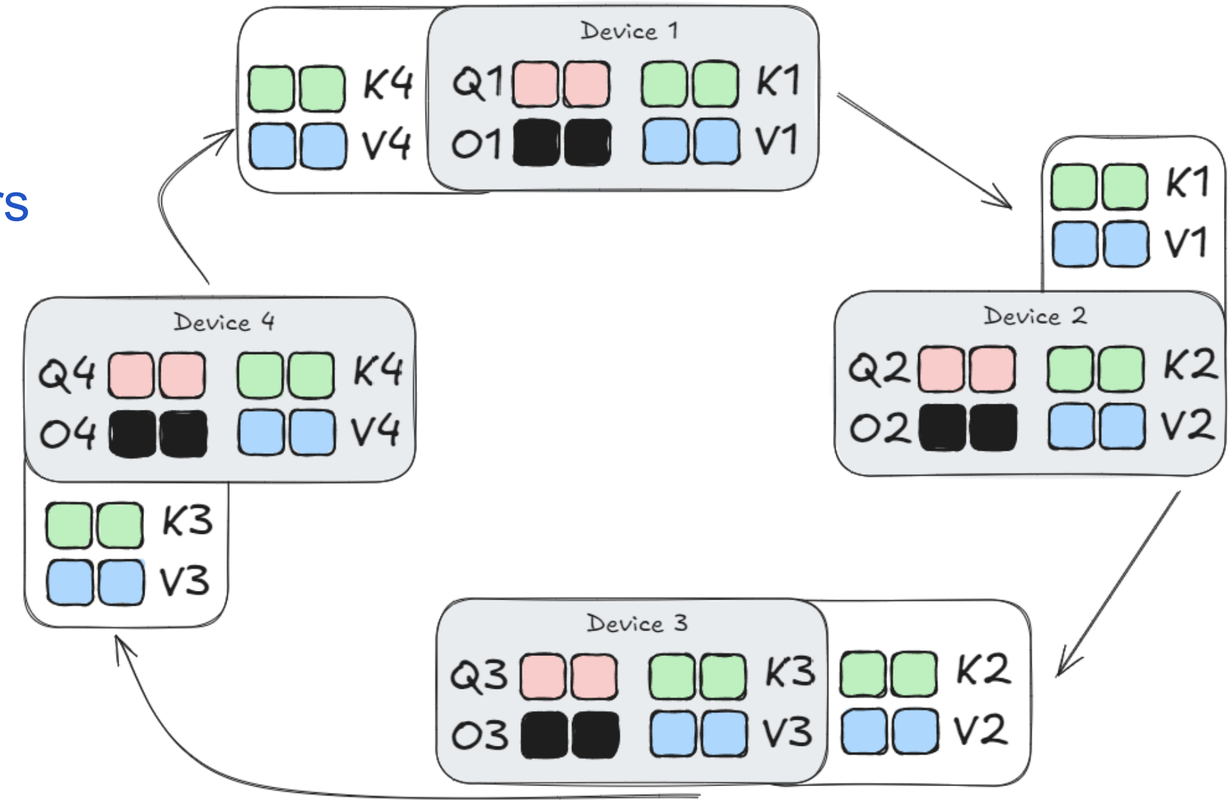

link

The more context, the better?

- The effective context length is shorter than stated;
- Long context does not mean that the model's answers will be better;
- When the context is expanded, its own problems arise, such as looping.

Mixture of Experts

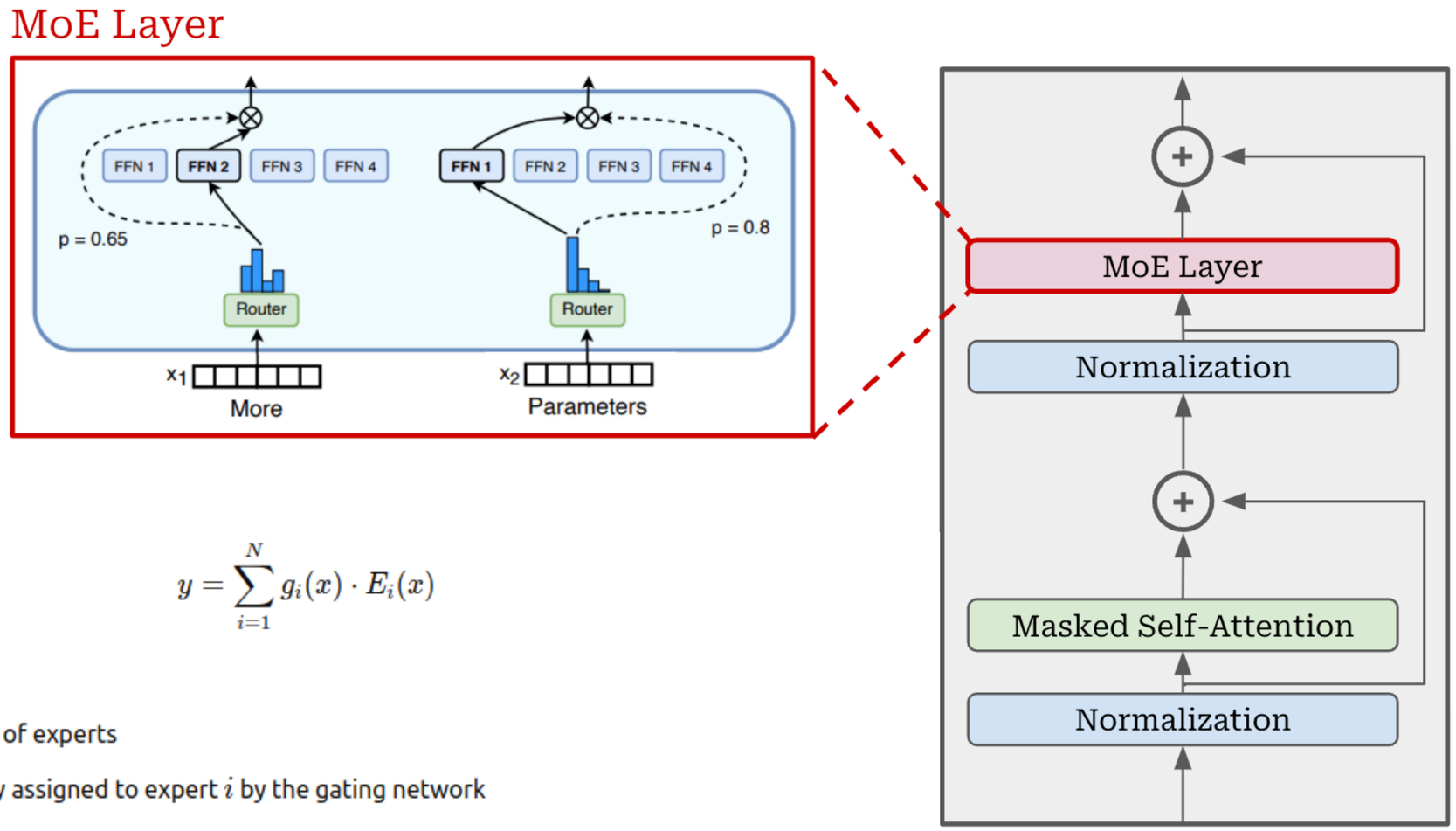

$$y = \sum_{i=1}^{N} g_i(x) \cdot E_i(x)$$

Where:

- N: Total number of experts
- $g_i(x)$: Probability assigned to expert i by the gating network
- $E_i(x)$: Output of expert i

Recap

- High-quality data is needed
- Size isn't everything
- Inference must be fast and cheap
- Long context matters

Next:

- Modern LLM architectures and updates