REVISIONS			
SYM	DESCRIPTION	BY	DATE
A	Release to production	BJD	3/6/15
B	Made base 3mm thicker	BJD	4/11/15

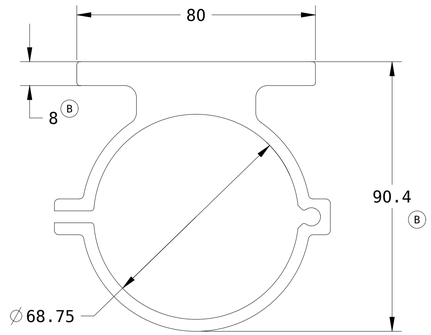

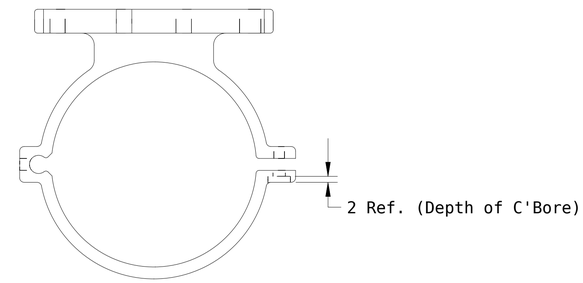

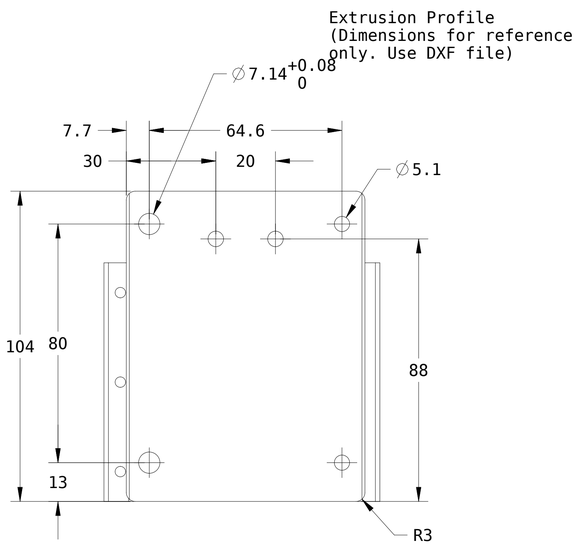

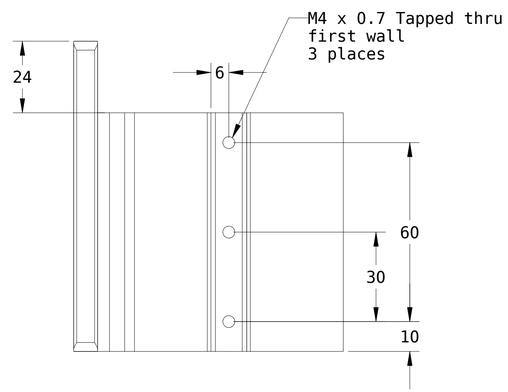

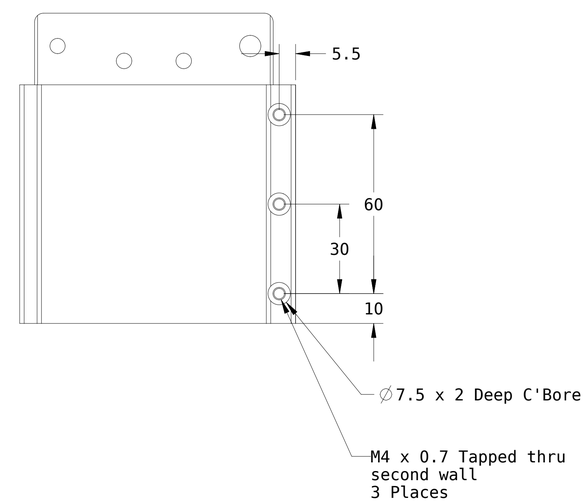

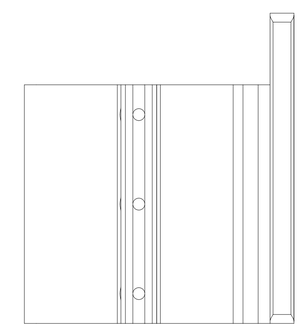

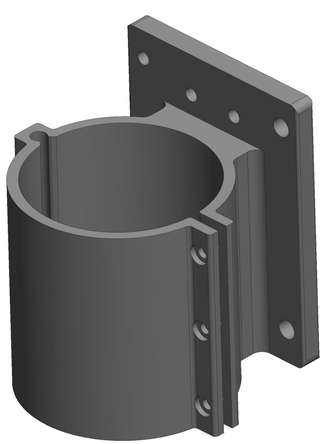

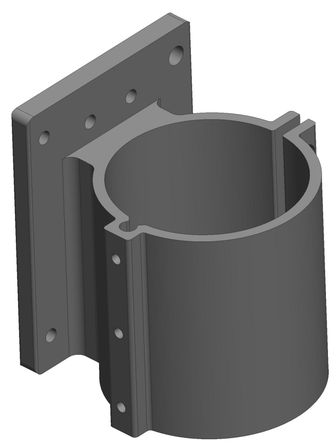

Notes:
1. All dimensions in millimeters.
2. Material: Aluminum 6063
3. Use supplied DXF for profile dimensions.
4. Straightness: 0.0125"/Foot
5. Twist: Less than 0.5°/Foot
6. Angular Tolerances of Profile: ±1°
7. Flatness of profile areas: 0.004"
8. Finish: Bead blast with gloss black anodized

This work is licensed under a Creative Commons Attribution-Noncommercial-Share Alike 3.0 License

UNLESS OTHERWISE SPECIFIED:	DRAWN	BJD	3/4/15
FRACTIONAL ± 1/32 DECIMAL .XXX ± .010 .XX ± .020 ANGULAR ± 1/2° — DO NOT SCALE	CHECKER		
	MECH. ENGR.		
MATERIAL: SPEC:	ELEC. ENGR.		
FINISH: SPEC:	PROJ. ENGR.		
	CHIEF ENGR.		

Spindle Carriage

www.buildlog.net

80033

SCALE

SHEET 1 OF 1