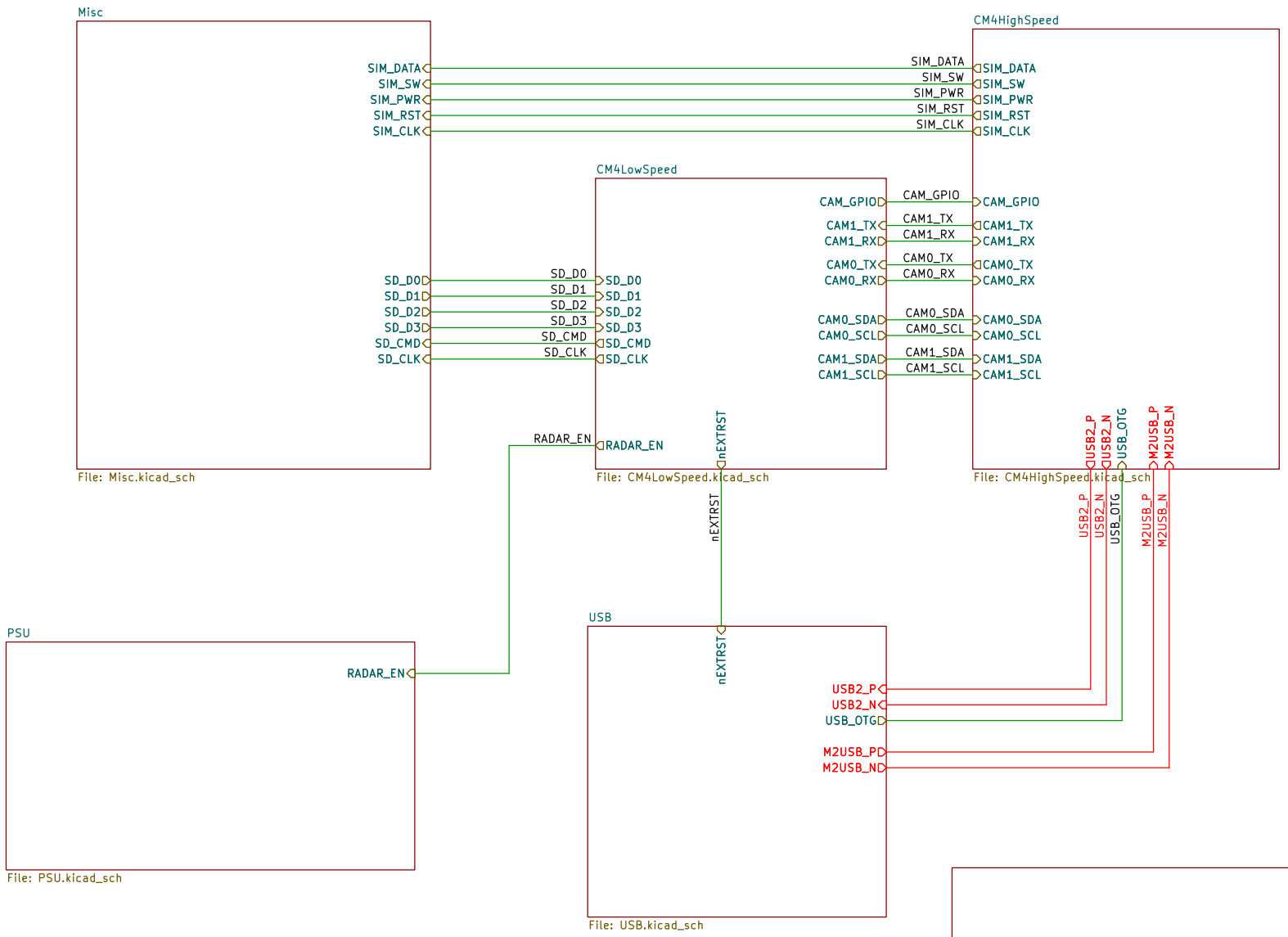


Sheet: /
File: CM4RadarBoard.kicad_sch

**Title:** Root

| Size: A4 | Date: | **Rev:** |
|---|---|---|
| KiCad E.D.A. 8.0.6 | | Id: 1/6 |

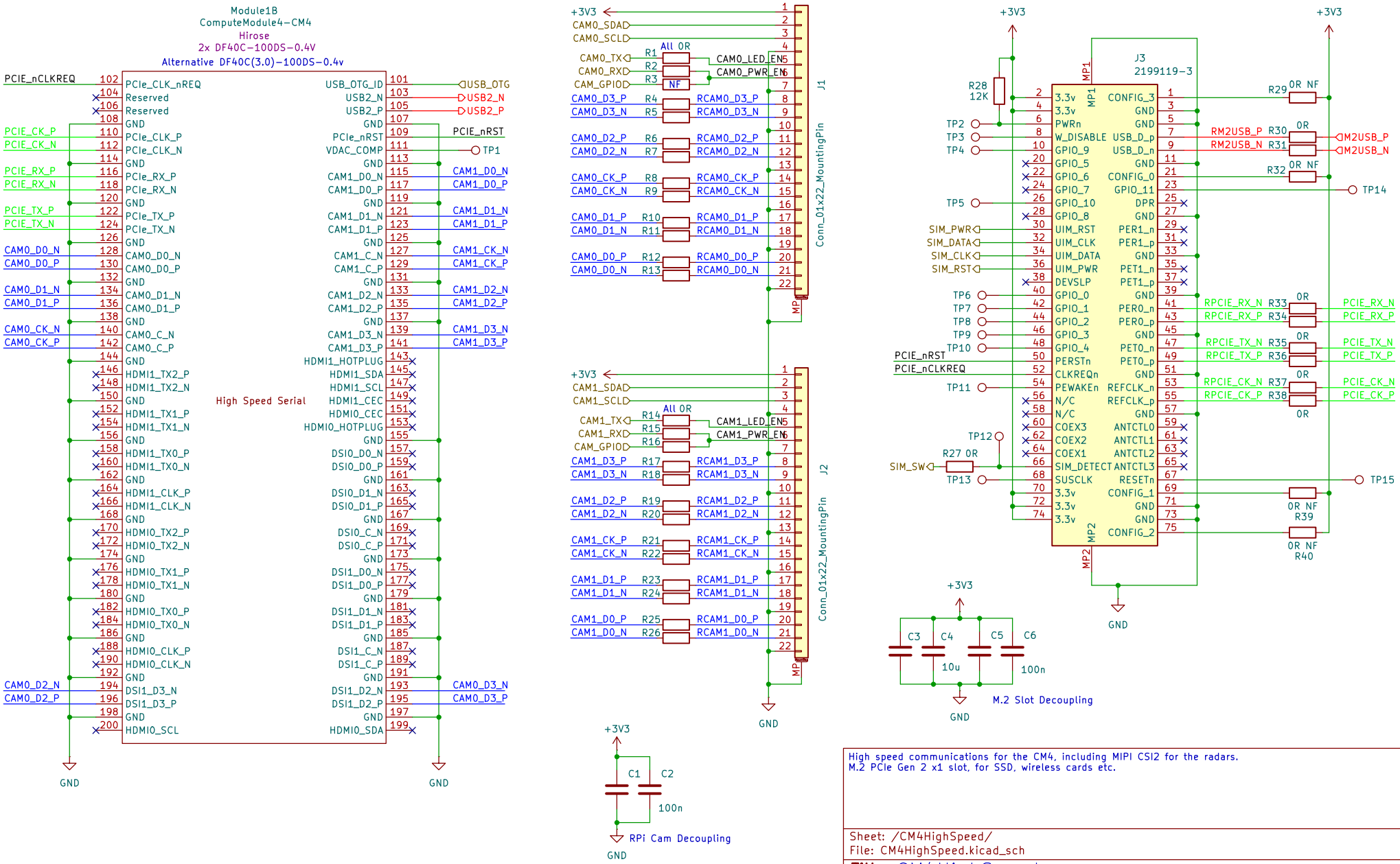


High speed communications for the CM4, including MIPI CSI2 for the radars.
M.2 PCIe Gen 2 x1 slot, for SSD, wireless cards etc.

Sheet: /CM4HighSpeed/
File: CM4HighSpeed.kicad_sch

**Title:** CM4HighSpeed

| Size: A4 | Date: 2024-11-04 | Rev: |
|---|---|---|
| KiCad E.D.A. 8.0.6 | | Id: 2/6 |

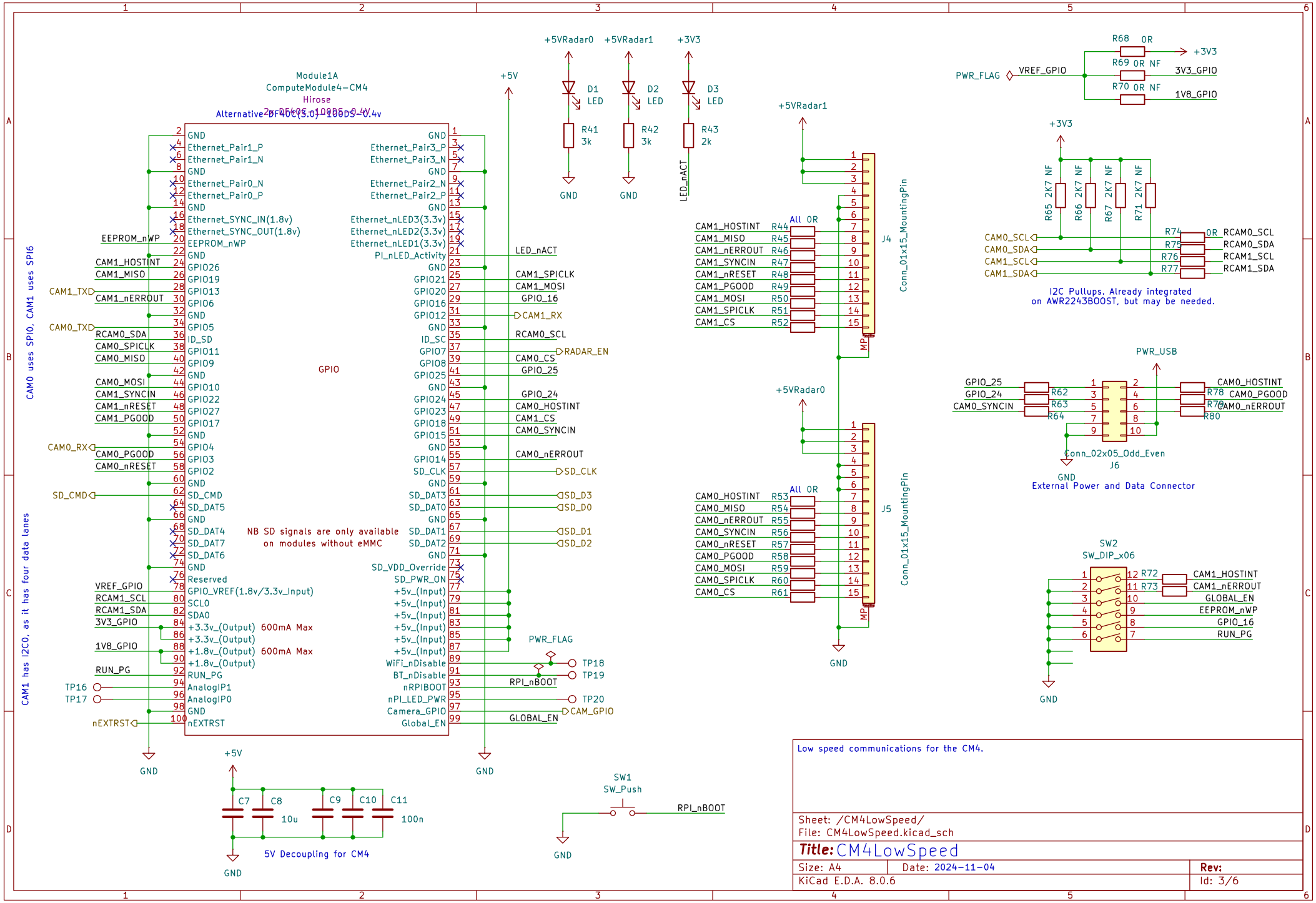
Module1A
ComputeModule4-CM4
Hirose
GPIO
NB SD signals are only available on modules without eMMC
CAM0 uses SPI0, CAM1 uses SPI6
CAM1 has I2C0, as it has four data lanes
+5VRadar0
+5VRadar1
+3V3
D1 LED
D2 LED
D3 LED
R41 3k
R42 3k
R43 2k
LED_nACT
GND
+5V
PWR_FLAG
R68 0R
R69 0R NF
R70 0R NF
VREF_GPIO
3V3_GPIO
1V8_GPIO
R65 2K7 NF
R66 2K7 NF
R67 2K7 NF
R71 2K7 NF
CAM0_SCL
CAM0_SDA
CAM1_SCL
CAM1_SDA
RCAM0_SCL
RCAM0_SDA
RCAM1_SCL
RCAM1_SDA
I2C Pullups. Already integrated on AWR2243BOOST, but may be needed.
J4
Conn_01x15_MountingPin
J5
All 0R
PWR_USB
GPIO_25
GPIO_24
CAM0_SYNCIN
CAM0_HOSTINT
CAM0_PGOOD
CAM0_nERROUT
Conn_02x05_Odd_Even
J6
External Power and Data Connector
SW2
SW_DIP_x06
CAM1_HOSTINT
CAM1_nERROUT
GLOBAL_EN
EEPROM_nWP
GPIO_16
RUN_PG
C7 C8 C9 C10 C11
10u
100n
5V Decoupling for CM4
SW1
SW_Push
RPI_nBOOT
Low speed communications for the CM4.
Sheet: /CM4LowSpeed/
File: CM4LowSpeed.kicad_sch
Title: CM4LowSpeed
Size: A4
Date: 2024-11-04
Rev:
KiCad E.D.A. 8.0.6
Id: 3/6

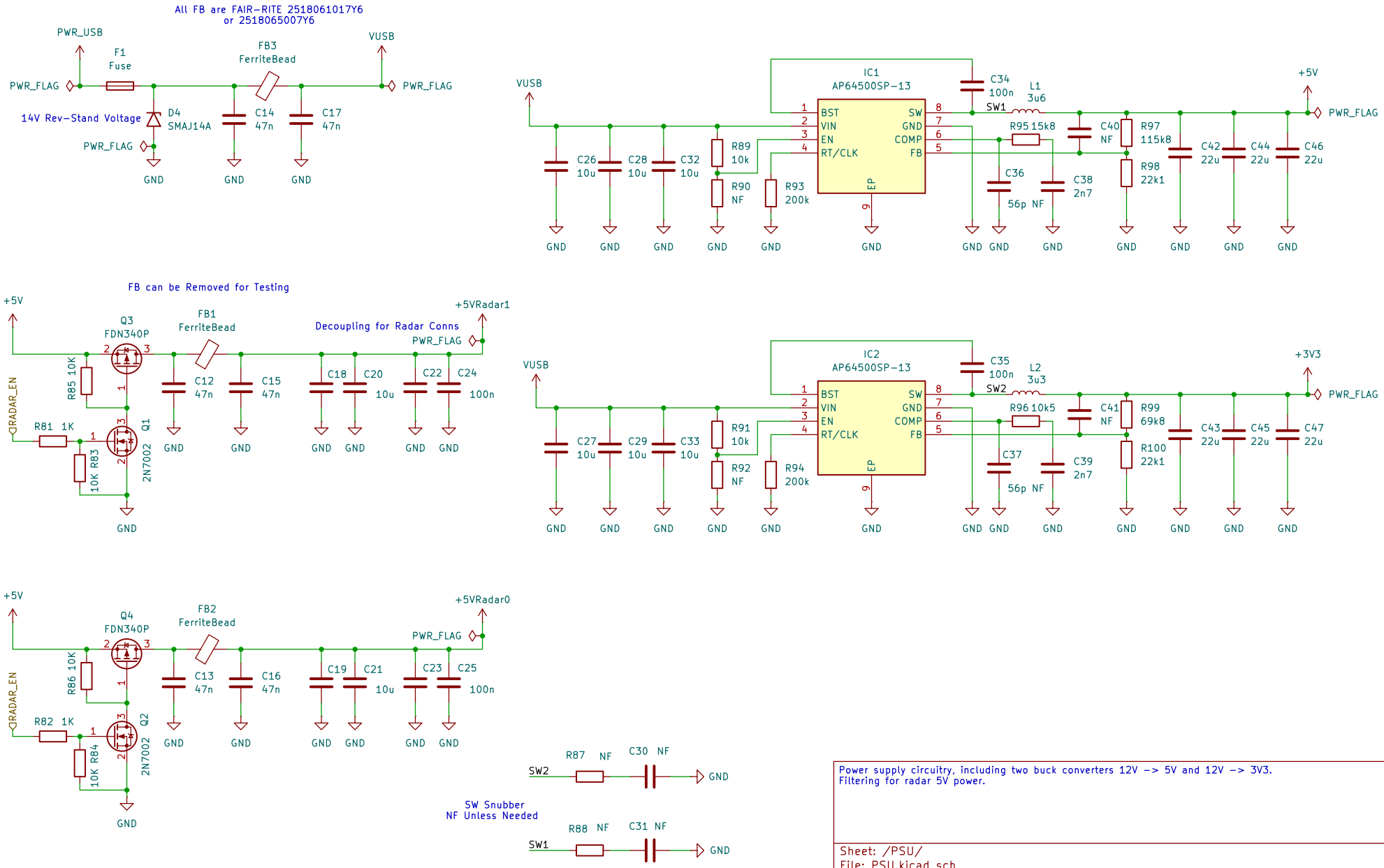


Power supply circuitry, including two buck converters 12V -> 5V and 12V -> 3V3.
Filtering for radar 5V power.

Sheet: /PSU/
File: PSU.kicad_sch

**Title:** PSU

| | | |
|---|---|---|
| Size: A4 | Date: 2024-11-04 | Rev: |
| KiCad E.D.A. 8.0.6 | | Id: 4/6 |

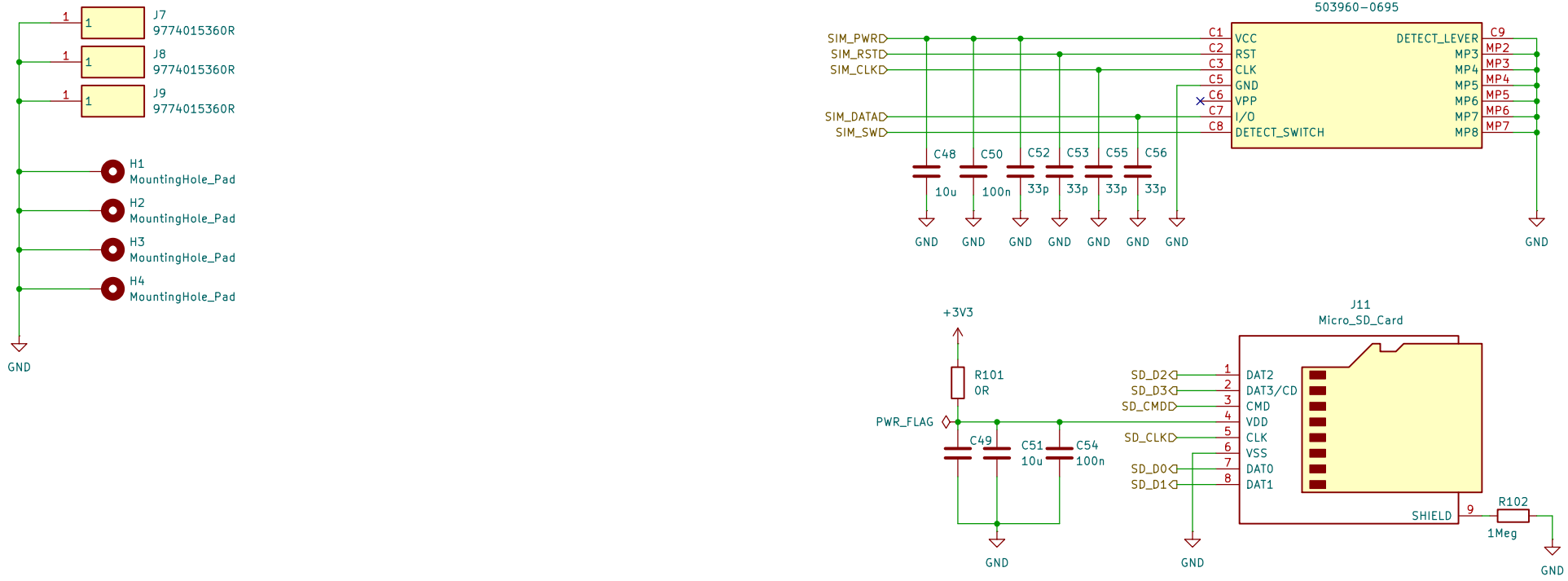


Miscellaneous mounting hardware.
Sim card and Micro-SD for booting when using CM4-Lite.

Sheet: /Misc/
File: Misc.kicad_sch

**Title:** Misc

| | | |
|---|---|---|
| Size: A4 | Date: 2024-11-04 | Rev: |
| KiCad E.D.A. 8.0.6 | | Id: 5/6 |

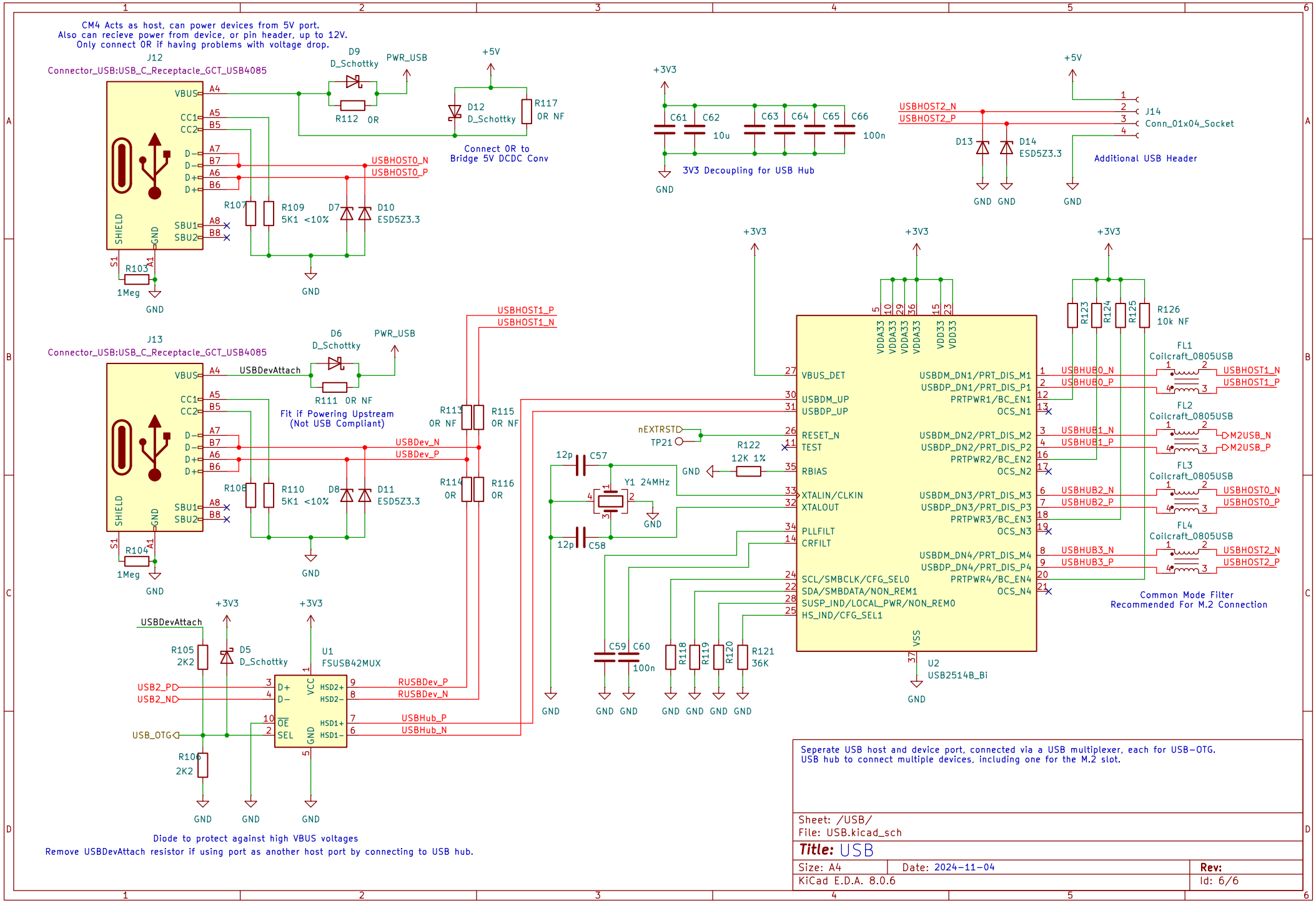
CM4 Acts as host, can power devices from 5V port.
Also can recieve power from device, or pin header, up to 12V.
Only connect 0R if having problems with voltage drop.
J12
Connector_USB:USB_C_Receptacle_GCT_USB4085
D9
D_Schottky
PWR_USB
R112 0R
+5V
D12
D_Schottky
R117
0R NF
Connect 0R to
Bridge 5V DCDC Conv
USBHOST0_N
USBHOST0_P
R107
R109
5K1 <10%
D7
D10
ESD5Z3.3
R103
1Meg
GND
+3V3
C61 C62 10u
C63 C64 C65 C66 100n
3V3 Decoupling for USB Hub
USBHOST2_N
USBHOST2_P
D13
D14
ESD5Z3.3
J14
Conn_01x04_Socket
Additional USB Header
J13
Connector_USB:USB_C_Receptacle_GCT_USB4085
USBDevAttach
D6
D_Schottky
R111 0R NF
Fit if Powering Upstream
(Not USB Compliant)
USBHOST1_P
USBHOST1_N
R113 0R NF
R115 0R NF
USBDev_N
USBDev_P
R108
R110
5K1 <10%
D8
D11
ESD5Z3.3
R114 0R
R116 0R
R104
1Meg
R105 2K2
D5
D_Schottky
U1
FSUSB42MUX
USB2_PD
USB2_ND
RUSBDev_P
RUSBDev_N
USBHub_P
USBHub_N
USB_OTG
R106 2K2
Diode to protect against high VBUS voltages
Remove USBDevAttach resistor if using port as another host port by connecting to USB hub.
nEXTRSTD
TP21
R122 12K 1%
12p C57
12p C58
Y1 24MHz
C59 C60 100n
R118 R119 R120 R121 36K
VBUS_DET
USBDM_UP
USBDP_UP
RESET_N
TEST
RBIAS
XTALIN/CLKIN
XTALOUT
PLLFILT
CRFILT
SCL/SMBCLK/CFG_SEL0
SDA/SMBDATA/NON_REM1
SUSP_IND/LOCAL_PWR/NON_REM0
HS_IND/CFG_SEL1
USBDM_DN1/PRT_DIS_M1
USBDP_DN1/PRT_DIS_P1
PRTPWR1/BC_EN1
OCS_N1
USBDM_DN2/PRT_DIS_M2
USBDP_DN2/PRT_DIS_P2
PRTPWR2/BC_EN2
OCS_N2
USBDM_DN3/PRT_DIS_M3
USBDP_DN3/PRT_DIS_P3
PRTPWR3/BC_EN3
OCS_N3
USBDM_DN4/PRT_DIS_M4
USBDP_DN4/PRT_DIS_P4
PRTPWR4/BC_EN4
OCS_N4
VDDA33
VDD33
VSS
U2
USB2514B_Bi
R123 R124 R125 R126 10k NF
FL1
Coilcraft_0805USB
FL2
Coilcraft_0805USB
FL3
Coilcraft_0805USB
FL4
Coilcraft_0805USB
USBHUB0_N
USBHUB0_P
USBHUB1_N
USBHUB1_P
USBHUB2_N
USBHUB2_P
USBHUB3_N
USBHUB3_P
M2USB_N
M2USB_P
Common Mode Filter
Recommended For M.2 Connection
Seperate USB host and device port, connected via a USB multiplexer, each for USB-OTG.
USB hub to connect multiple devices, including one for the M.2 slot.
Sheet: /USB/
File: USB.kicad_sch
Title: USB
Size: A4
Date: 2024-11-04
Rev:
KiCad E.D.A. 8.0.6
Id: 6/6