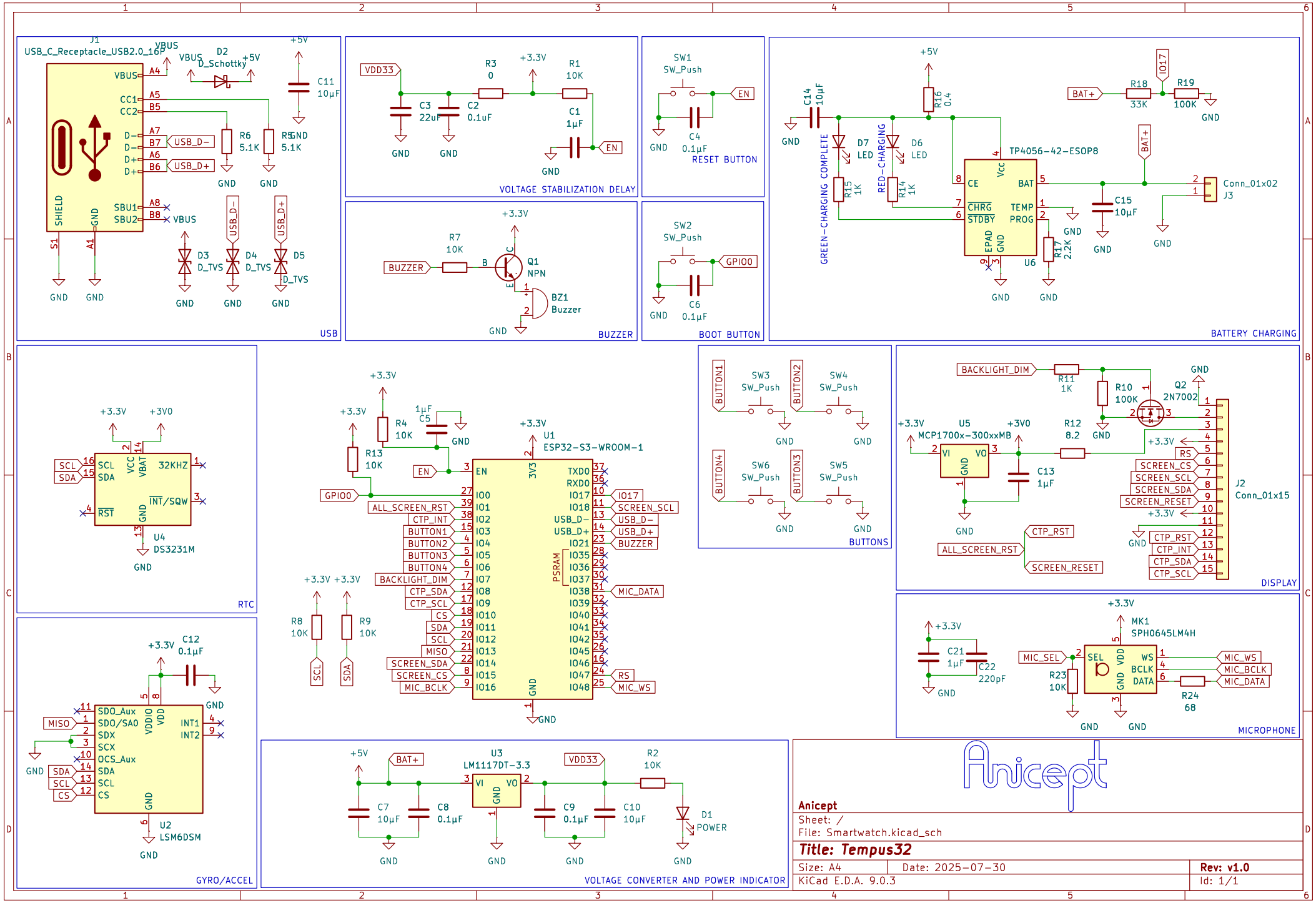

Anicept

Sheet: /

File: Smartwatch.kicad_sch

Title: Tempus32

Size: A4	Date: 2025-07-30	Rev: v1.0
KiCad E.D.A. 9.0.3		Id: 1/1