1

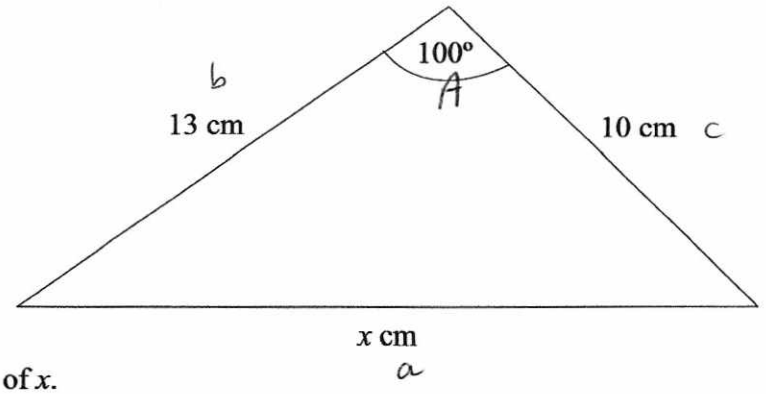

Work out the value of x.
Give your answer to 1 decimal place.

$a^2 = b^2 + c^2 - 2bc \cos A$

$x^2 = (13)^2 + (10)^2 - 2(13)(10)\cos(100)$

$x^2 = 314.1485...$

$x = \sqrt{Ans}$

$= \underline{\underline{17.7}}$ (1dp)

17.7

(Total for question 1 is 3 marks)

2

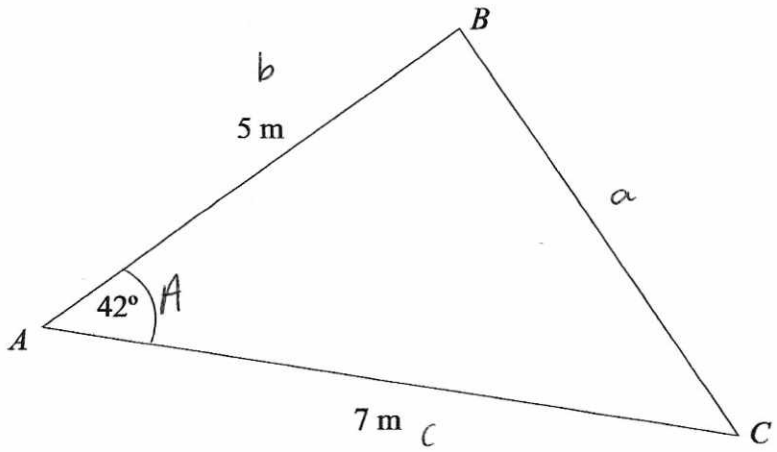

Work out the length of BC.
Give your answer to 3 significant figures.

$a^2 = (5)^2 + (7)^2 - 2(5)(7)\cos(42)$

$a^2 = 21.97986...$

$a = \sqrt{Ans}$

$= 4.69$ (3sf)

4.69 m

(Total for question 2 is 3 marks)

3

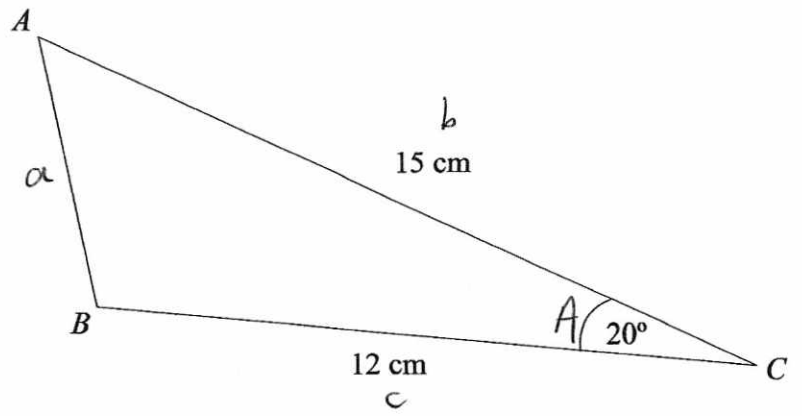

Work out the length of AB.
Give your answer to 1 decimal place.

$a^2 = (15)^2 + (12)^2 - 2(15)(12)\cos(20)$

$a^2 = 30.7106...$

$a^2 = \sqrt{Ans}$

$a = 5.5$ (1dp)

5.5 cm

(Total for question 3 is 3 marks)

4

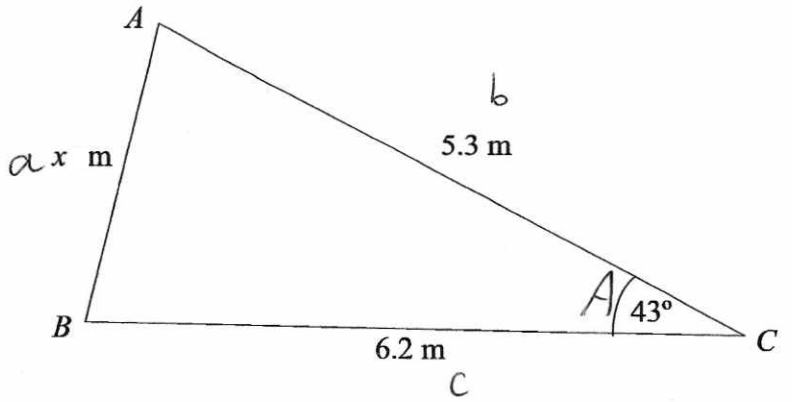

Work out the value of x.
Give your answer to 3 significant figures.

$x^2 = (5.3)^2 + (6.2)^2 - 2(5.3)(6.2)\cos(43)$

$x^2 = 18.4654...$

$x = \sqrt{Ans}$

$x = 4.30$ (3sf)

4.30

(Total for question 4 is 3 marks)

5

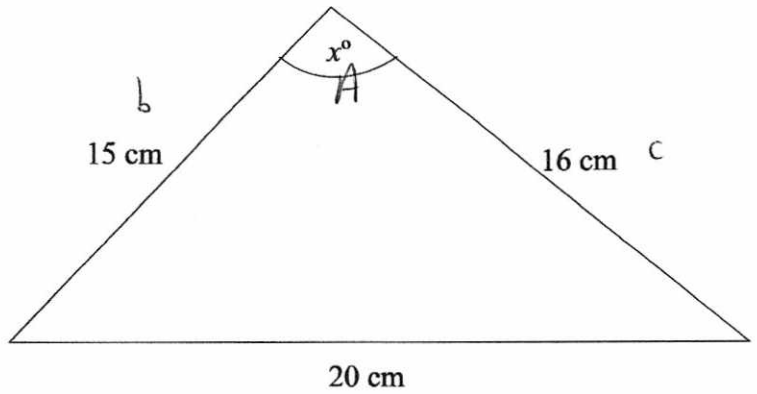

Work out the value of x.
Give your answer to 3 significant figures.

$$\cos A = \frac{b^2 + c^2 - a^2}{2bc}$$

$$\cos x = \frac{(15)^2 + (16)^2 - (20)^2}{2(15)(16)}$$

$$\cos x = \frac{27}{160}$$

$$x = \cos^{-1}(\text{Ans})$$

$$= 80.3 \ (3sf)$$

80.3

(Total for question 5 is 3 marks)

6

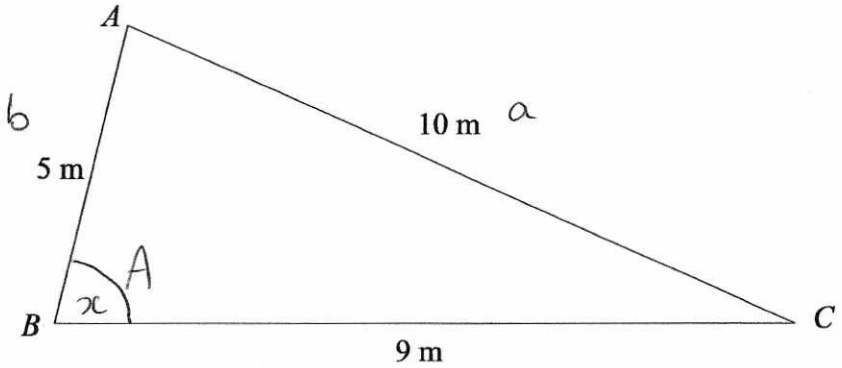

Work out the size of angle ABC
Give your answer to the nearest degree.

$$\cos x = \frac{(5)^2 + (9)^2 - (10)^2}{2(5)(9)}$$

$$\cos x = \frac{1}{15}$$

$$x = \cos^{-1}(\text{Ans})$$

$$= 86 \ (\text{Nearest degree})$$

86 °

(Total for question 6 is 3 marks)

7

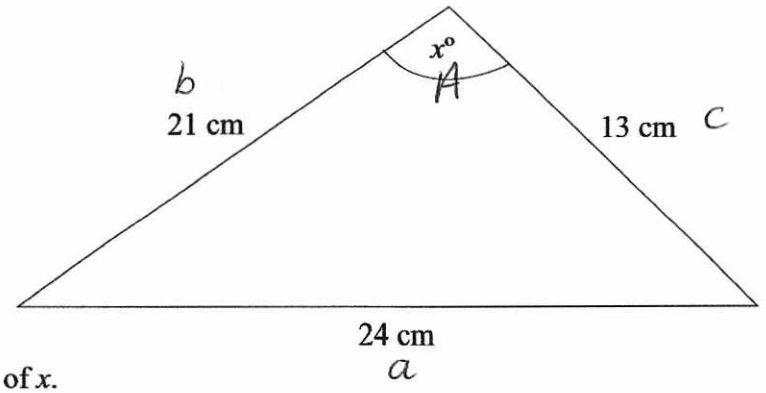

Work out the value of x.
Give your answer to 1 decimal place.

$$\cos x = \frac{(21)^2 + (13)^2 - (24)^2}{2(21)(13)}$$

$$\cos x = \frac{17}{273}$$

$$x = \cos^{-1}(\text{Ans})$$

$$= 86.4 \ (1\text{dp})$$

86.4

(Total for question 7 is 3 marks)

8

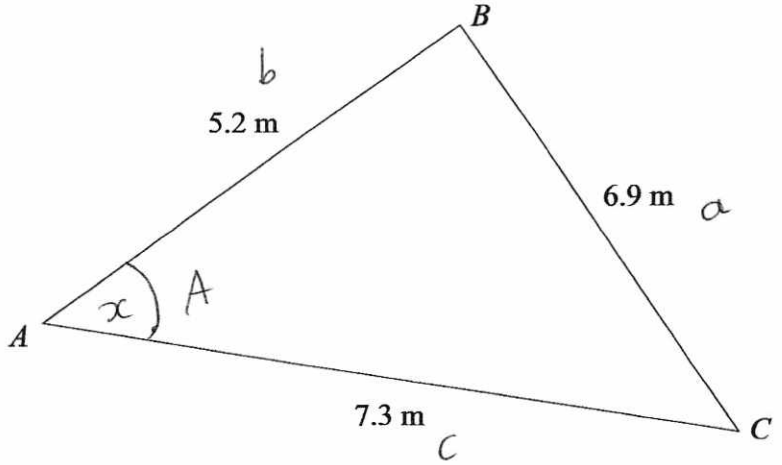

Work out the size of angle BAC.
Give your answer to 3 significant figures.

$$\cos x = \frac{(5.2)^2 + (7.3)^2 - (6.9)^2}{2(5.2)(7.3)}$$

$$\cos x = \frac{409}{949}$$

$$x = \cos^{-1}(\text{Ans})$$

$$= 64.5 \ (3sf)$$

64.5 °

(Total for question 8 is 3 marks)

9

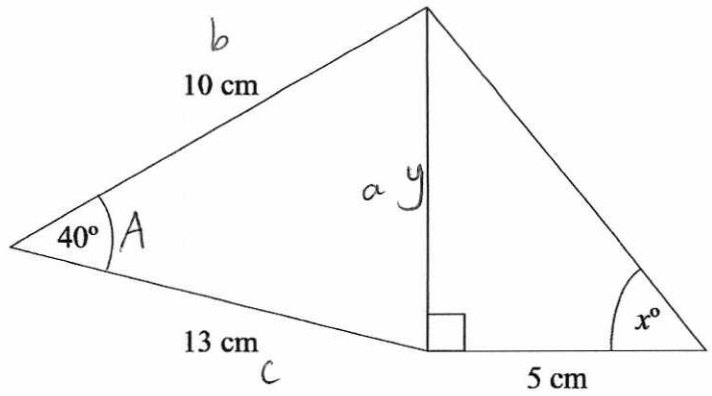

Work out the value of x.
Give your answer to 1 decimal place.

$$y^2 = (10)^2 + (13)^2 - 2(10)(13)\cos(40)$$
$$y^2 = 69.828\ldots$$
$$y = \sqrt{Ans}$$
$$y = 8.356341591$$

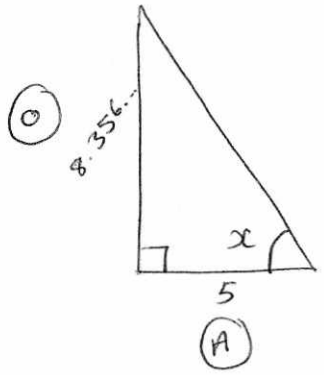

$$\tan x = \frac{Ans}{5}$$
$$x = \tan^{-1}\left(\frac{Ans}{5}\right)$$
$$= 59.1^\circ \quad (1dp)$$

59.1

(Total for question 9 is 5 marks)

10

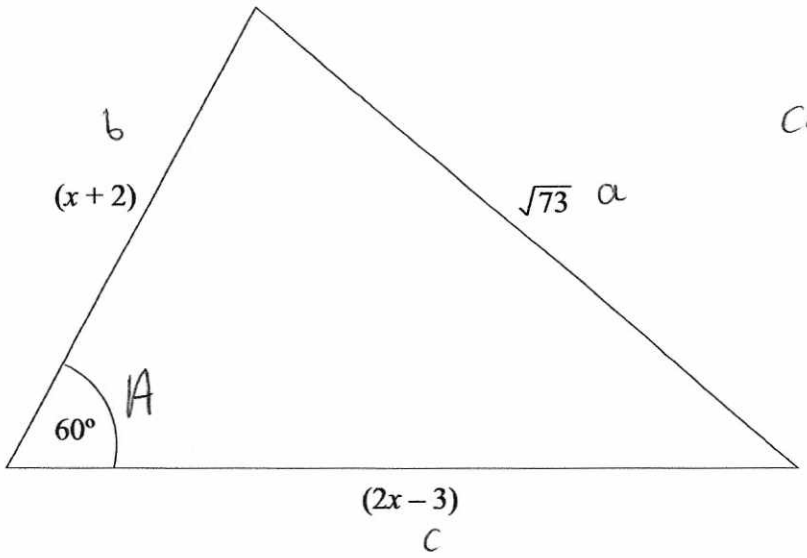

$\cos 60 = \frac{1}{2}$

Work out the value of x.

$a^2 = b^2 + c^2 - 2bc \cos A$

$73 = (x+2)^2 + (2x-3)^2 - 2(x+2)(2x-3)\cos(60)$

$73 = (x+2)(x+2) + (2x-3)(2x-3) - (x+2)(2x-3)$

$73 = x^2 + 2x + 2x + 4 + 4x^2 - 6x - 6x + 9 - (2x^2 - 3x + 4x - 6)$

$73 = 5x^2 - 8x + 13 - (2x^2 + x - 6)$

$73 = 3x^2 - 9x + 19$

$0 = 3x^2 - 9x - 54$

$0 = x^2 - 3x - 18$

$0 = (x - 6)(x + 3)$

$x = 6 \quad x = -3$

x cannot $= -3$ as the lengths would be negative.

$x = 6$

6

(Total for question 10 is 5 marks)

11

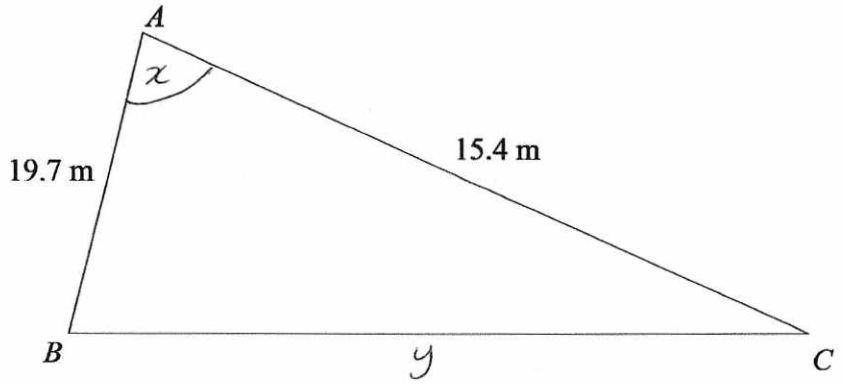

The area of the triangle is 100m^2
Calculate the perimeter of triangle *ABC*.
Give your answer to 3 significant figures.

$$\frac{1}{2} a b \sin C = 100$$

$$\frac{1}{2}(19.7)(15.4)\sin x = 100$$

$$151.69 \sin x = 100$$

$$\sin x = \frac{100}{151.69}$$

$$x = \sin^{-1}\left(\frac{100}{151.69}\right)$$

$$= 41.24187853$$

$$y^2 = (19.7)^2 + (15.4)^2 - 2(19.7)(15.4)\cos(41.24187...)$$

$$y^2 = 169.0069753$$

$$y = \sqrt{Ans}$$

$$= 13.0 \quad (3sf)$$

$$\text{Perimeter} = 19.7 + 15.4 + 13.0$$

$$= 48.1 \text{ m}$$

48.1 .....m

(Total for question 11 is 5 marks)