**1** On the grid, reflect the shaded shape in the mirror line.

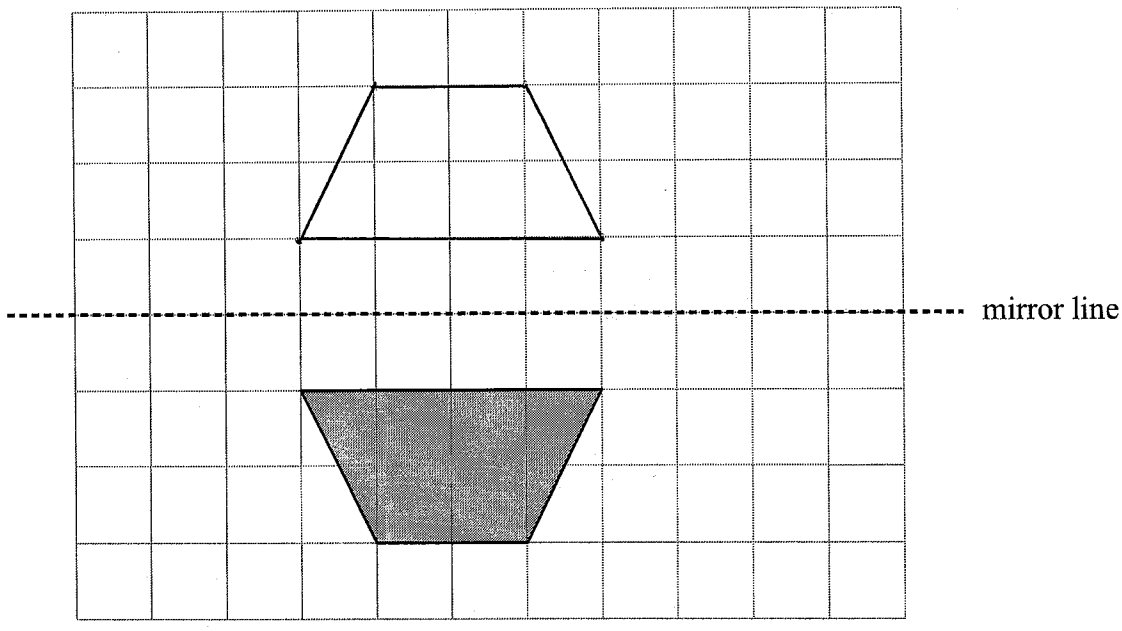


**(Total for question 1 is 1 mark)**

---

**2**

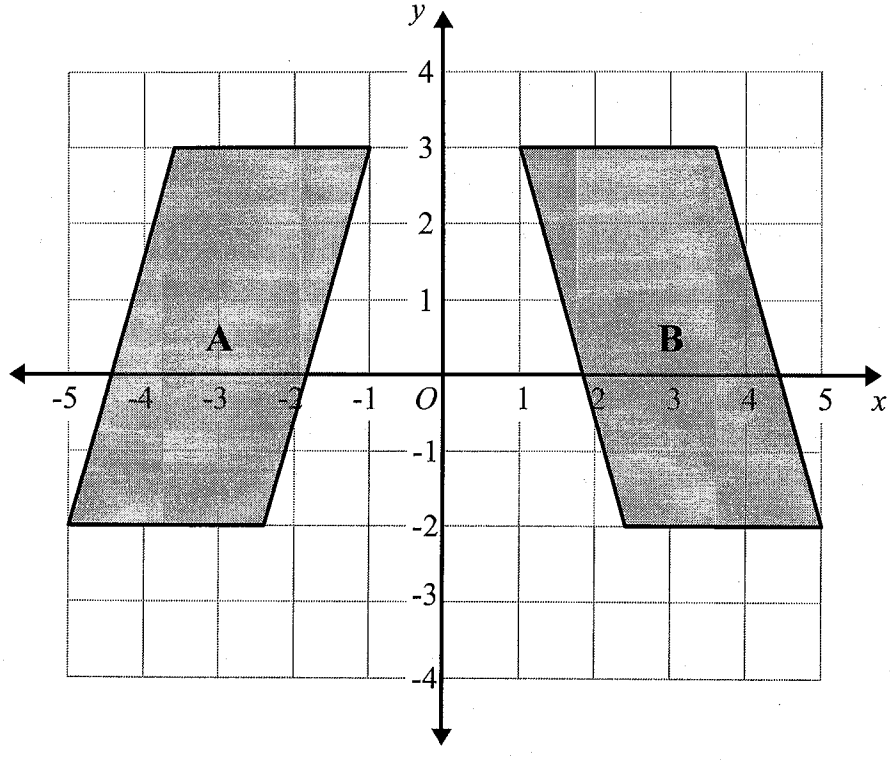


Describe fully the single transformation that maps shape **A** onto shape **B.**

Reflection in the y-axis

**(Total for question 2 is 2 marks)**

**3**

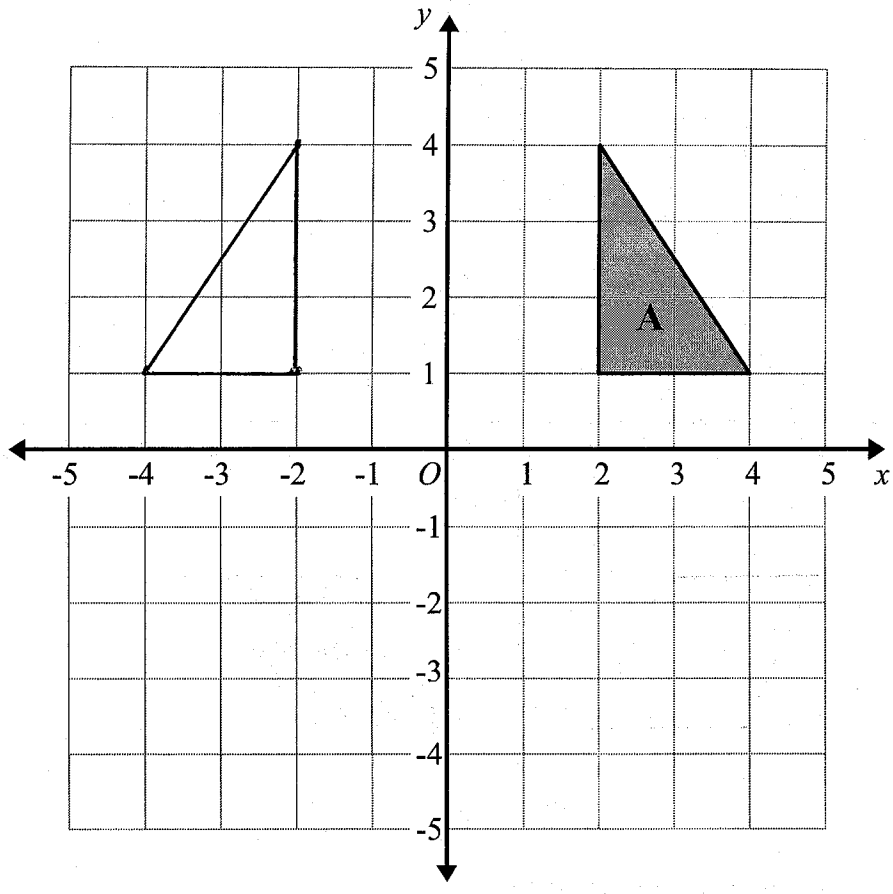


Reflect triangle **A** in the $y$-axis.

**(Total for question 3 is 2 marks)**

---

**4**

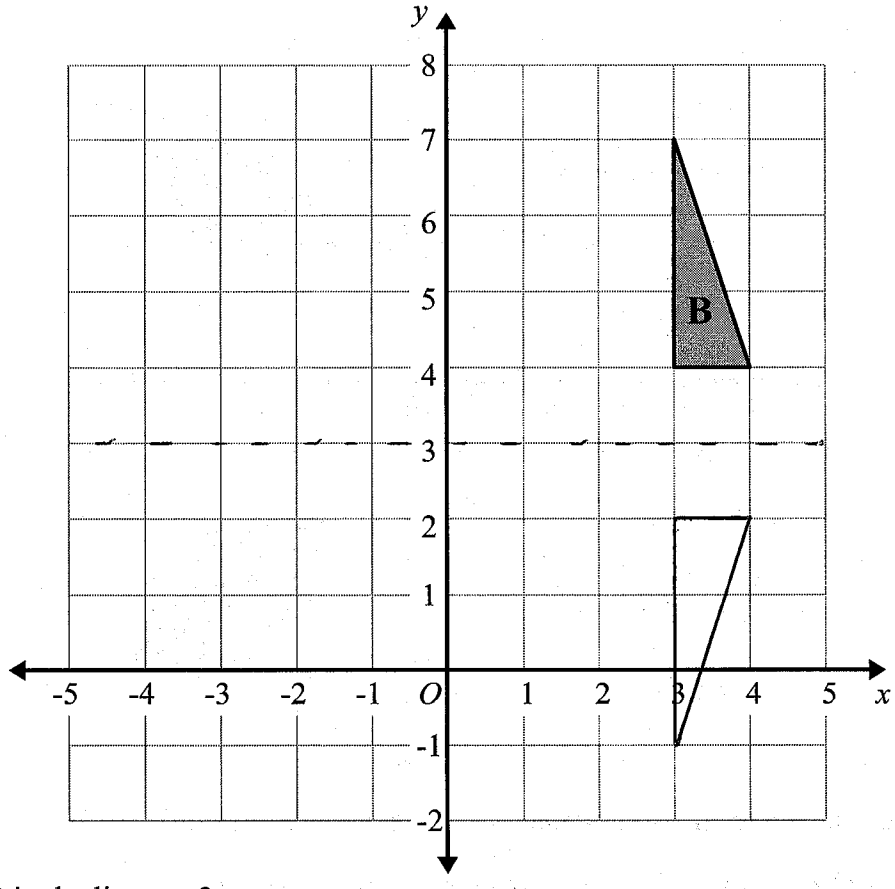


Reflect shape **B** in the line $y = 3$.

**(Total for question 4 is 2 marks)**

**5**

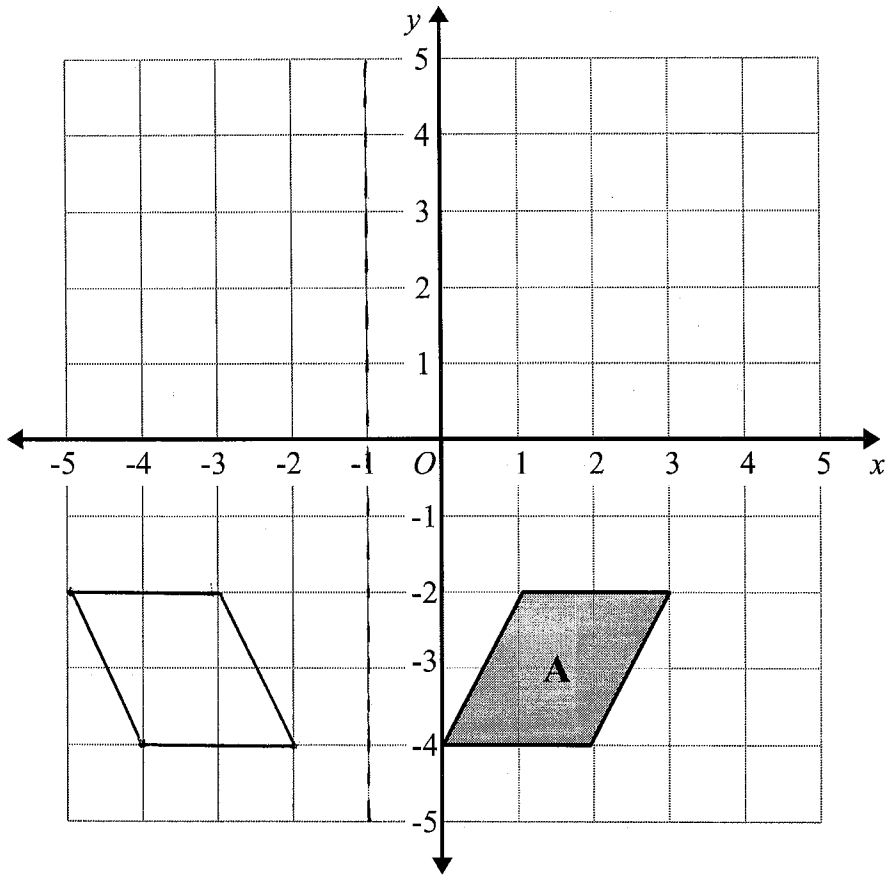


Reflect shape **A** in the line with equation $x = -1$

**(Total for question 5 is 2 marks)**

**6**

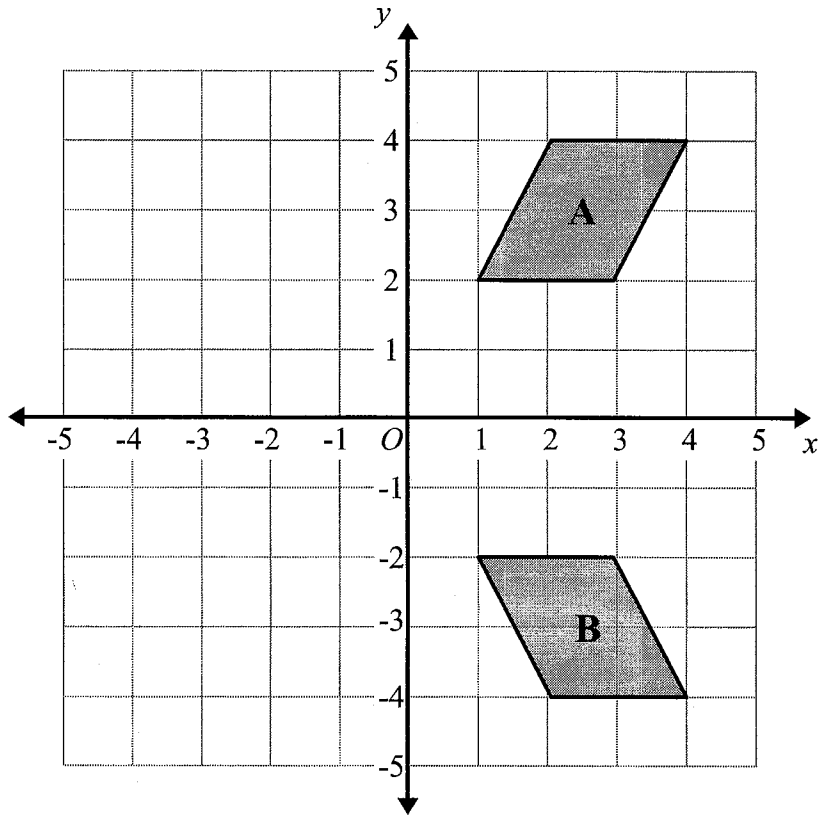


Describe fully the single transformation that maps shape **A** onto shape **B**.

Reflection in the x-axis

**(Total for question 6 is 2 marks)**

**7**

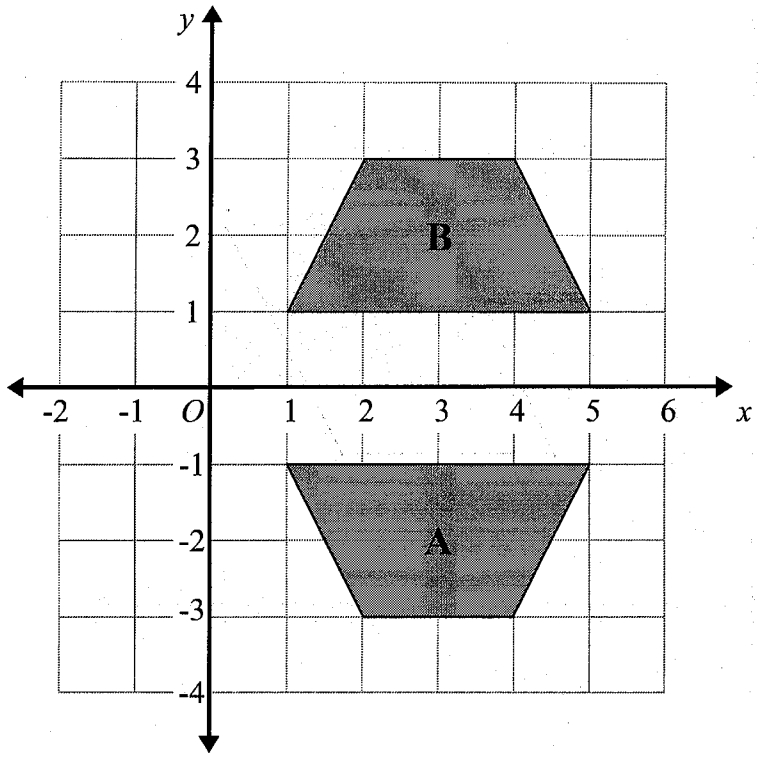


Describe fully the single transformation that maps shape **A** onto shape **B**.

Reflection in the x-axis

**(Total for question 7 is 2 marks)**

**8**

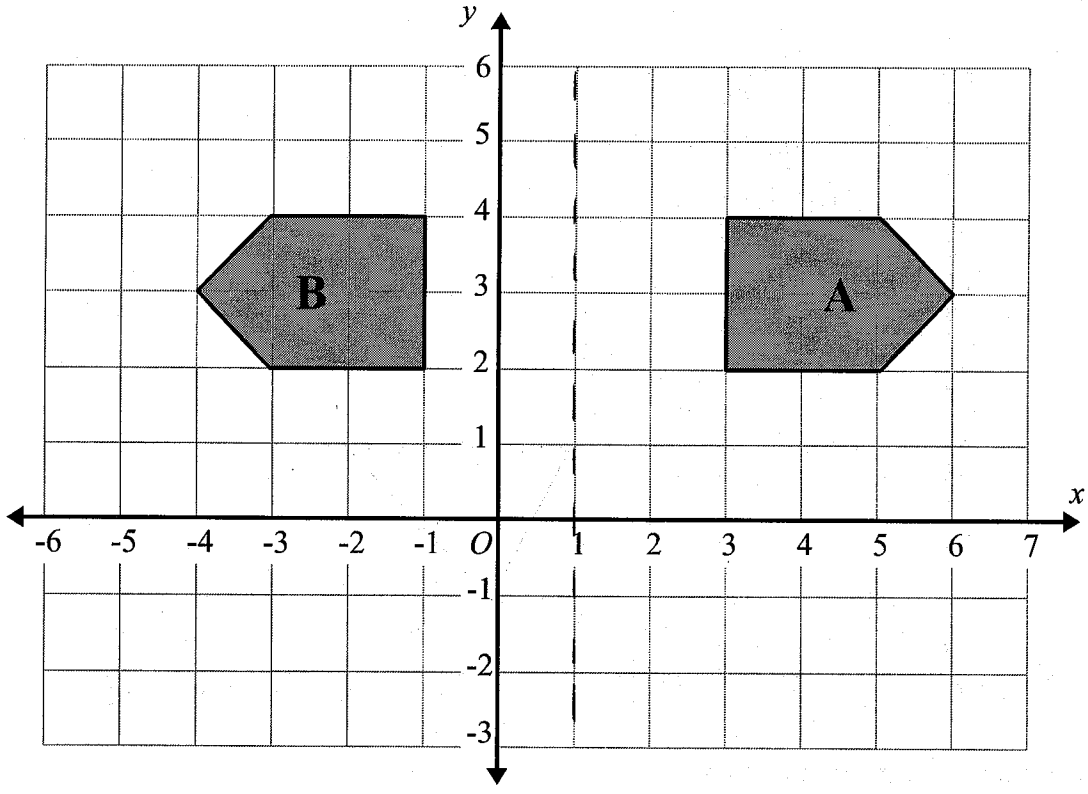


Describe fully the single transformation that maps shape **A** onto shape **B**.

Reflection in the line $x = 1$

**(Total for question 8 is 2 marks)**

**9**

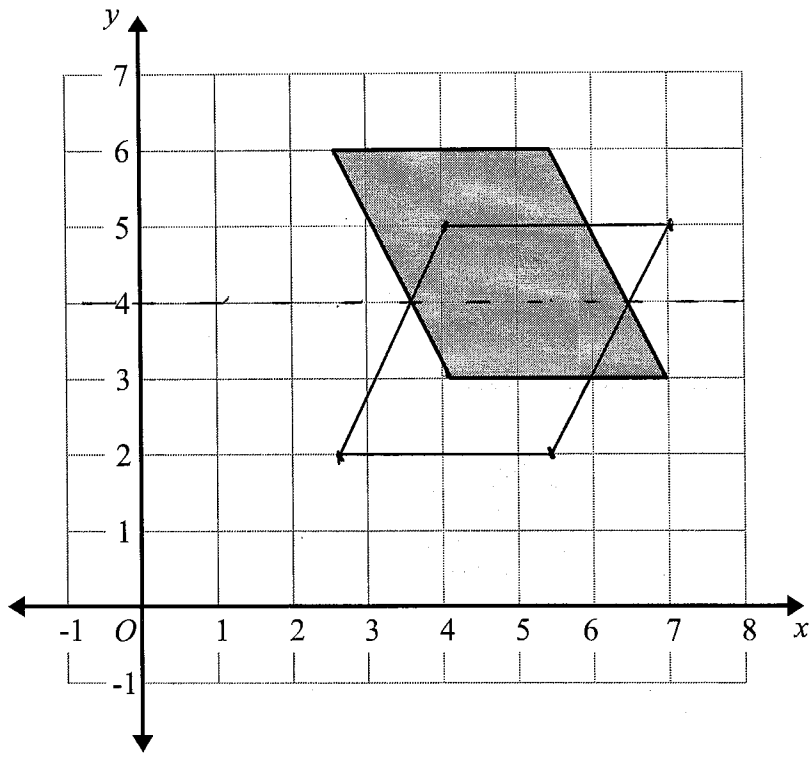


Reflect the shaded shape in the line $y = 4$

**(Total for question 9 is 2 marks)**

**10**

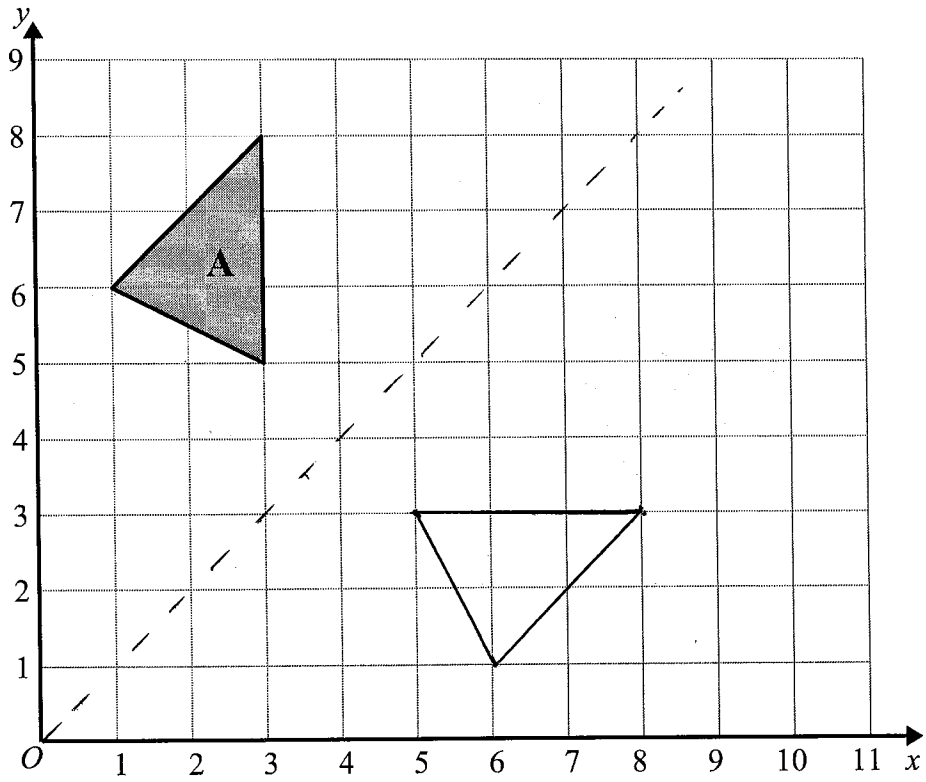


Reflect triangle **A** in the line $y = x$

**(Total for question 10 is 2 marks)**