Mathematics

Try to do all any working out in gaps on this sheet. BE NEAT!

1. Find the total in ***litres*** of 700 ml, 300 ml and 450 ml: _____

2. How many grams are there in $\frac{1}{8}$ of 1 Kg? _____

3. Find the Area of the ***Rectangle***: _____

Find the Area of ***Triangle X***: _____

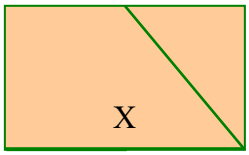

4. Find the product of 2.6 and 9: _____ * Did you note the decimal point?

5.

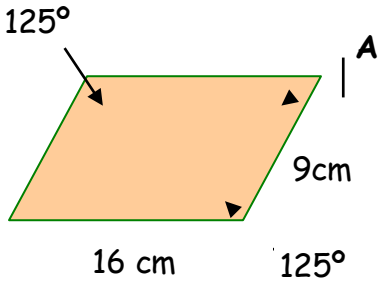

Name the shape: _____

Find its perimeter: _____

Find Angle **A**: _____

* Read the elephant's note

6. 10.04 = _____ hundredths

7. Decrease 72p by $\frac{1}{8}$ = _____

8. Find in **lowest terms:**

8 out of 20 = _____ 25 out of 40 = _____ 70 out of 100 = _____

9. 3.6 x 9 = _____ * Did you note the decimal point?

10. 250,000 = _____ million

Speed Test!

How ***fast*** are you??

You did this last week.

Now do it, in your head, against the clock.

Under 30 seconds – not bad

Under 20 seconds – on the ball

Under 15 seconds – whiz brain

Under 10 seconds – Einstein

Ladder 7

1.	**40**
2.	75% of this
3.	Find $33\frac{1}{3}$ %
4.	x 8
5.	50% of this
6.	25% of this
7.	n^2
8.	Divide by 4
9.	X 8
10.	Find 50%
	Your answer is

Are you enjoying these?

Perimeters

Give each perimeter:

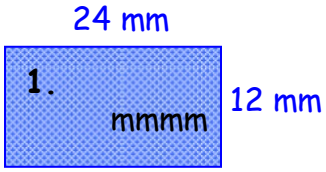

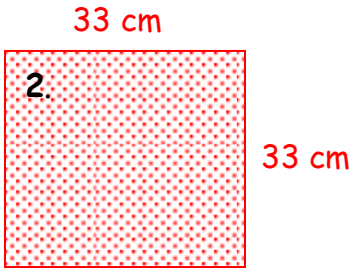

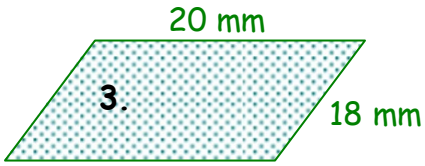

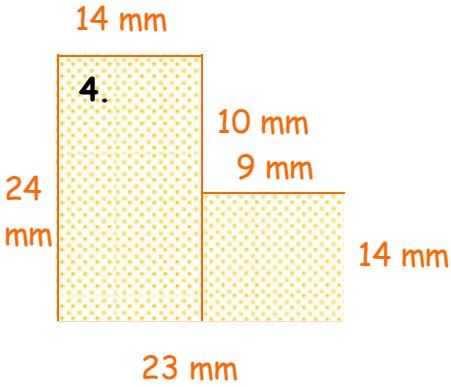

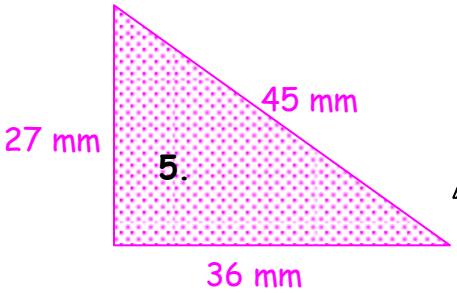

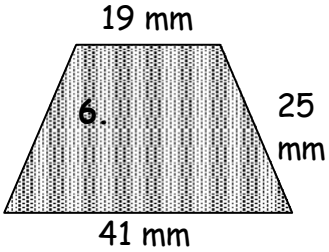

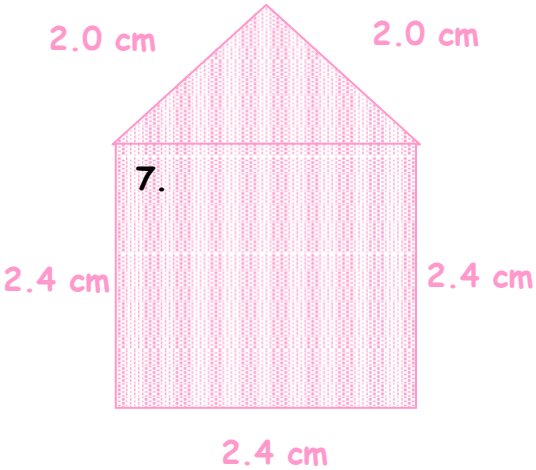

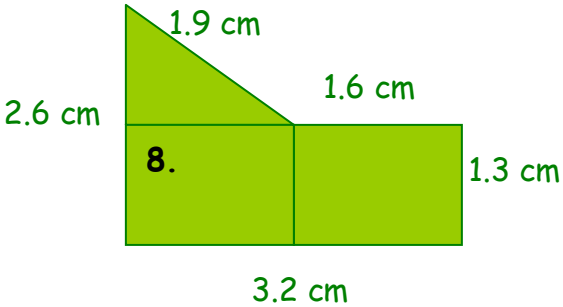

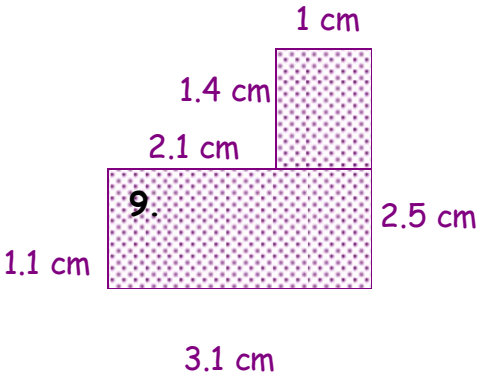

EASY - if I add up carefully!

© Learning Street

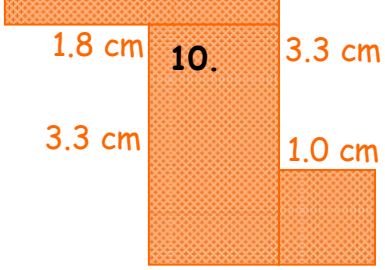

1.0 cm

2.3 cm

1. This table shows an electricity meter reading on two different dates. The readings show the number of units which have been used.

2	9	9	4	March 1st
3	8	8	2	April 1st

a. How many units of electricity have been used between March 1st and April 1st? _____

b. If each unit of electricity costs 7.5p, how much would the total cost be? _____

c. If the same number of units were used each month on average as during March what would be the total number of units used over a full year? _____

d. What would a full year of electricity use cost? _____

---

2. The table below has some gaps. Fill in the missing numbers.

	Distance	**Time**	**Speed**
Example	**100 miles**	**2 hours**	**50 mph**
a.	200 miles	_____	25mph
b.	60 miles	3 hours	_____
c.	49 miles	30 minutes	_____
d.	_____	2 hours	56mph

---

3. Use the digits provided to make the largest number possible in each case.

a. 4045 = _____

b. 701418 = _____

c. 91218 = _____

d. 30236 = _____

e. 4212 = _____

4. The graph below shows the average days of rain for each month in Kent. Answer the following questions by making use of the information on it.

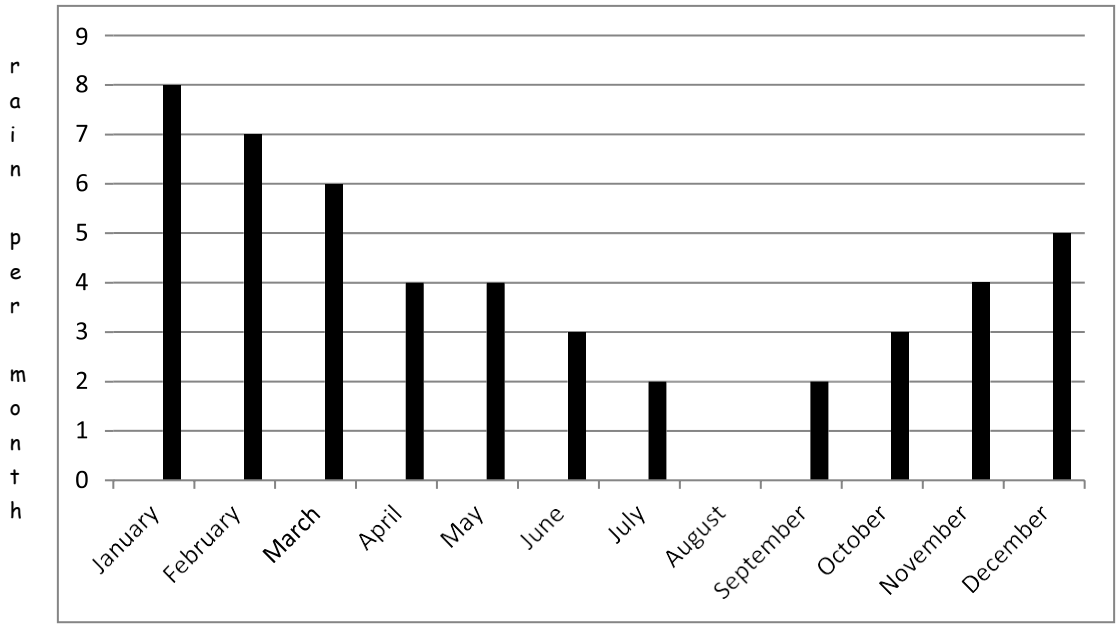

a. How many months are free of rain? _____

b. What is the total number of days of rain for the three months with the heaviest rainfall? _____

c. What is the total number of days of rainfall for the whole year? _____

d. What is the average number of days for rain for each month of the year? _____

e. What is the average number of days of rain for the first three months of the year? _____

---

5. Calculate the answers to the following:

a. What is 60% of 80? _____

b. What is the difference in temperature between -9° and +32° _____

c. If $x^3 + x = 30$, what is the value of x? _____

d. What is the square root of 64? _____

e. What is 5^3? _____

f. If $y = 4(a+b)$ and $a = 5$ and $b = 2$, what is y? _____

g. How many dozens are there in 144? _____

h. If $z = 3x + 5$ and $z = 20$, what is the value of x? _____

i. What is the cube root of 27? _____

j. If $x^2 + 1 = 82$, what is the value of x? _____

---

6. Find the missing numbers in these number sequences.

Example: 2 5 9 (14) 20

The answer is 14 because the difference between the numbers is increasing by one each time. 9 to 14 is 5 and 14 to 20 is 6.

a.	2	4	8	___	32	
b.	43	38	32	25	___	8
c.	22	25	29	34	___	47
d.	0.25	0.5	___	2.0	4	
e.	-2	-4	-8	___	-32	
f.	436	429	420	409	___	

---

7. Work out the answer to the following time problems.

a. A train leaves the station at 12.56 and gets to its destination at 17.35. How long will the journey have taken? _____

b. If a train arrives at a station at 11.35 and leaves having taken on new supplies at 12.15, how long will it have been at the station? _____

c. My train home in the evening usually leaves at 19.17 and gets to my home station at 20.18. Today the train was 22 minutes late leaving and was delayed for 18 minutes on the journey. What time did it reach my home station? _____

d. If a train takes 45 minutes to get from Hemel Hempstead to London and the train leaves at 17.19, what time will it get into London?

_____

8. This table shows the results three pupils had in their language exams. Study the table and answer the questions.

	English	Spanish	French	German
John	9	7	9	6
Peter	7	8	5	9
Jane	7	7	7	9

a. Which pupil got the highest scores overall? _____

b. Which pupil beat the other two in most subjects?

_____

c. What was Jane's average score? _____

d. What was the average of all the pupils in German? _____

e. In which subject did the pupils get the lowest total between them?

_____

f. What was the average score across all exams taken?

_____

---

9. Work out the answers as decimals to the following sums. Give your answer to one decimal place not rounded up:

a. 41.3 ÷ 7 = _____

b. 9 ÷ 3 = _____

c. 86.5 ÷ 100 = _____

d. 4 ÷ 3 = _____

e. 38.2 ÷ 8 = _____

10. Each of the letters have been given a value. Use the values to work out the answers to the questions.

A	B	S	O	L	U	T	E
5	6	4	2	1	3	10	7

a. A x T + 5 = _____

b. L + E – 5 = _____

c. E x B – A = _____

d. T + B + L = _____

e. Add S to U and multiply the answer by E = _____

f. Multiply B by L and divide the answer by U = _____

g. Multiply E by itself, add A and subtract S = _____

h. B x B + A – O = _____

i. T + A – B – 5 = _____

j. E + T + A + O = _____

---

11. Answer the following distance and speed questions.

a. A train journey takes 6 hours. In the first five hours it covers 55, 70, 52, 60 and 53 miles. How many miles must it cover in the sixth hour to average 60 miles per hour? _____

b. On the next leg of the journey the train coves 69, 52 and 68 miles. What would its average now be for the whole 9 hours? _____

---

12. Find the pattern and enter the missing number.

a. ____ 4 8 16 32

b. 4 8 12 ___ 20

c. 36 33 28 21 ___ 1

_____END OF TEST _____

If you have time

- Go back and complete any questions you missed out.

- Check your answers carefully.

ANSWERS - COMPLETE MATHS – PART 31

Maths

Revision Sheet

1. 1.450 L
2. 125g
3. $74cm^2$, $37cm^2$
4. 23.4
5. Parallelogram * correct spelling?
   50 cm
   55°
6. 1004
7. 63
8. $\frac{2}{5}$ $\frac{5}{8}$ $\frac{7}{10}$
9. 32.4
10. $\frac{1}{4}$ million

Calculation Ladder

Answer = 100

Perimeter

1. 72 mm
2. 132 mm
3. 76 mm
4. 94 mm
5. 108 mm
6. 110 mm
7. 11.2 cm
8. 10.6 cm
9. 11.2 cm
10. 16.8 cm

ANSWERS - COMPLETE MATHS – PART 31

Maths type 1 paper 6

Page 1

1.
a. 888
b. £66.60
c. 10,656
d. £799.20

2.
a. 8hrs
b. 20mph
c. 98mph
d. 112 miles

3.
a. 5440
b. 874110
c. 98211
d. 63320
e. 4221

Page 2

4.
a. 1
b. 21
c. 48
d. 4
e. 7

5.
a. 48
b. 41°
c. 3
d. 8
e. 125

Page 3

f. 28
g. 12
h. 5
i. 3
j. 9

6.
a. 16
b. 17
c. 40
d. 1
e. -16
f. 396

7.
a. 4hr39min
b. 40min
c. 20.58
d. 18.04

Page 4

8.
a. John
b. John
c. 7.5
d. 8
e. French
f. 7.5

9.
a. 5.9
b. 3
c. 0.8
d. 1.3
e. 4.7

Page 5

10.
a. 55
b. 3
c. 37
d. 17
e. 49
f. 2
g. 50
h. 39
i. 4
j. 24

11.
a. 70
b. 61

12.
a. 2
b. 16
c. 12