1

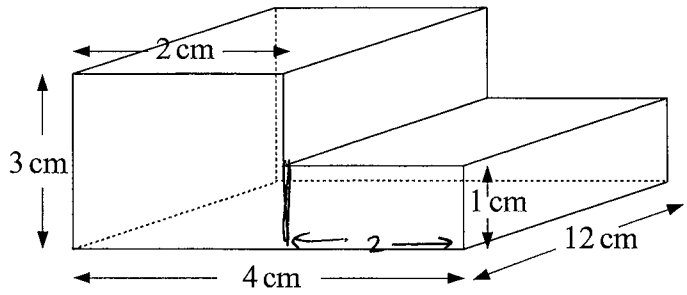

The diagram shows a prism.

Work out the volume of the prism.

Area of cross section $= 3 \times 2 + 2 \times 1$

$= 6 + 2$

$= 8 \text{ cm}^2$

Volume $= 8 \times 12$

$= 96 \text{ cm}^3$

.....96.....cm³

(Total for question 1 is 3 marks)

2

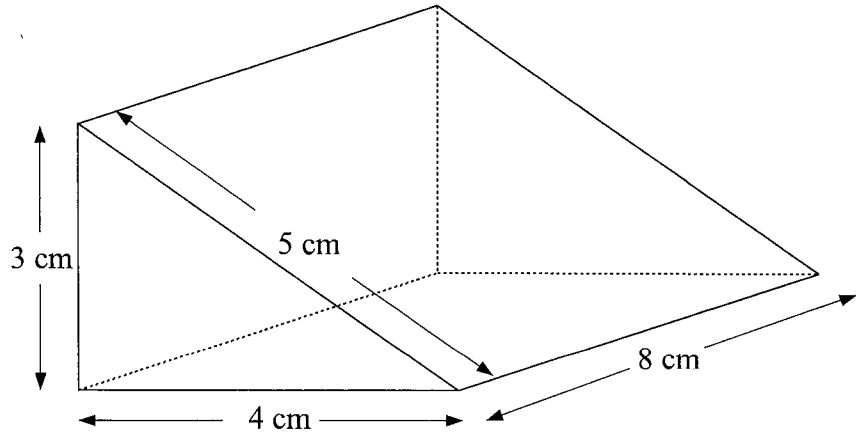

The diagram shows a triangular prism.
The cross-section of the prism is a right angled triangle.

Calculate the volume of the prism.

Area of cross section $= \frac{3 \times 4}{2} = 6 \text{ cm}^2$

Volume $= 6 \times 8$

$= 48 \text{ cm}^3$

.....48.....cm³

(Total for question 2 is 3 marks)

3

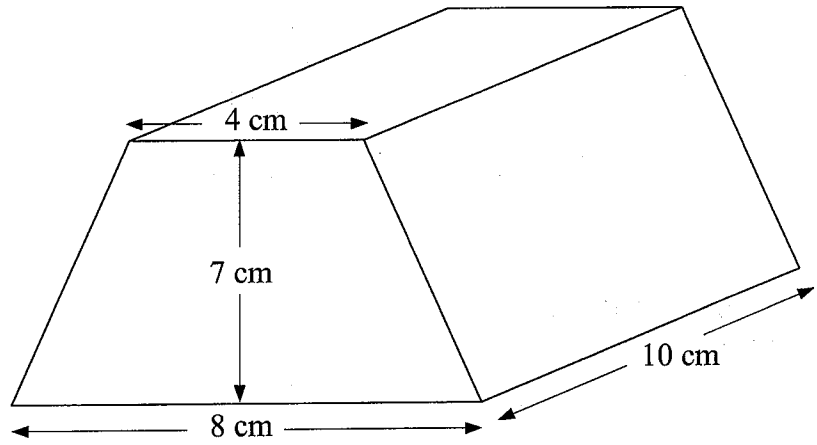

The diagram shows a prism.
The cross-section of the prism is a trapezium.

Work out the volume of the prism.

Area of cross section $= \frac{1}{2}(4+8) \times 7$
$= 6 \times 7$
$= 42 \text{ cm}^2$

Volume $= 42 \times 10$
$= 420 \text{ cm}^3$

420 ..... cm^3

(Total for question 3 is 3 marks)

4

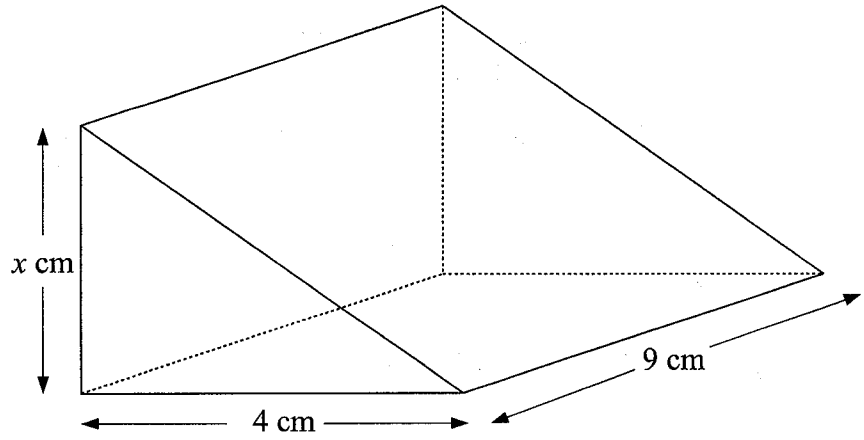

The diagram shows a triangular prism.
The cross-section of the prism is a right angled triangle.

The volume of the prism is 198 cm^3

Calculate the value of x Area of cross section $= \frac{4x}{2} = 2x$

Volume $= 2x \times 9 = 18x$

$18x = 198$
$x = \frac{198}{18} = \frac{99}{9} = 11 \text{ cm}$

11 .....

(Total for question 4 is 3 marks)

5

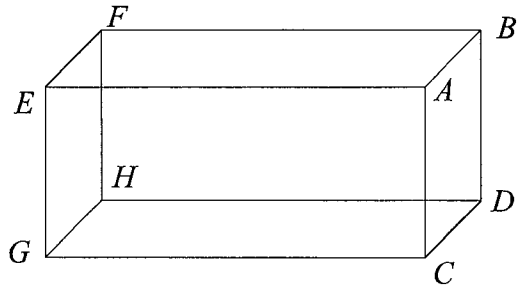

The diagram shows a cuboid *ABCDEFGH*
ABCD is a square with area 25cm^2.
CG = 12 cm.

Find the volume of the cuboid.

Volume = 25 × 12
= 300 cm^3

300 ..... cm^3

(Total for question 5 is 2 marks)

---

6 Bob has a van.
He is using the van to deliver boxes.
Each box is a cuboid, 60 cm by 30 cm by 40 cm.

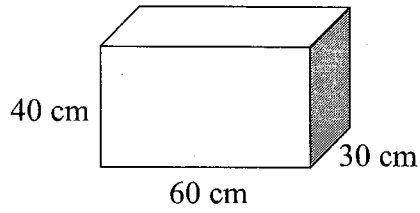

The van has the space for the boxes in the shape of a cuboid with:

length 3 m 300cm
width 1.8 m 180 cm
height 2 m 200 cm

Work out how many boxes can Bob fit into the van.

Length $\frac{300}{60} = 5$

Width $\frac{180}{30} = 6$

Height $\frac{200}{40} = 5$

Total boxes = 5 × 6 × 5
= 150

150 .....

(Total for question 6 is 3 marks)

7 The diagram shows a cuboid.

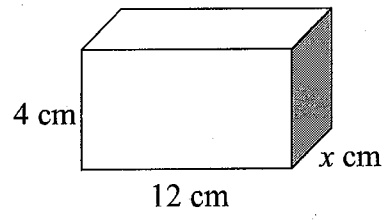

The volume of the cuboid is 120 cm^3

Area of cross section $= 4 \times 12$
$= 48\ cm^2$

Calculate the value of x

volume $= 48x$

$48x = 120$

$x = \frac{120}{48} = \frac{60}{24} = \frac{30}{12} = \frac{15}{6} = \frac{5}{2}$ ..... 2.5 .....

(Total for question 7 is 2 marks)

---

8 The diagram shows an empty water container.

Fiona is going to use a bucket to fill the container.
Each bucket can hold 12 litres of water.

How many buckets of water will be needed to fill the container?

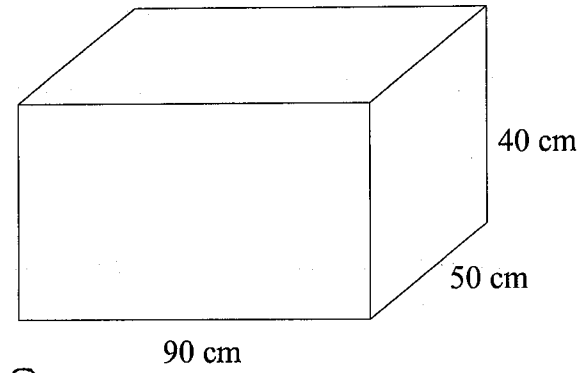

Area of cross section $= 90 \times 50$
$= 4500\ cm^2$

Volume $= 4500 \times 40$
$= 180\ 000\ cm^3$

$\boxed{1 \text{ litre} = 1000\ cm^3}$

volume $= 180$ litres

$\frac{180}{12} = \frac{90}{6} = \frac{45}{3} = 15$

..... 15 .....

(Total for question 8 is 4 marks)

9 Here is a cube.

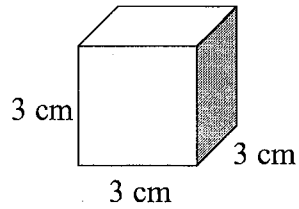

Work out the volume of five of these cubes.

$V = 3 \times 3 \times 3$

$= 27 \text{ cm}^3$

$27 \times 5 = 135$

.....135.....cm^3

(Total for question 9 is 2 marks)

---

10 The diagram shows an empty water container.

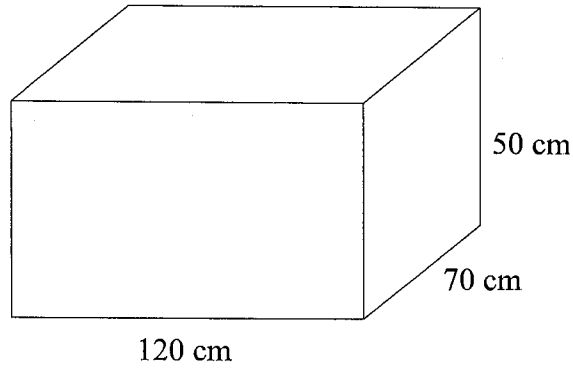

The container is going to be filled using a hose pipe.

The water will flow into the container at a rate of 2 litres per second.

How long will it take for the container to be filled completely?

volume $= 120 \times 70 \times 50$

$= 8400 \times 50$

$= 420000 \text{ cm}^3$

$\boxed{1000 \text{ cm}^3 = 1 \text{ litre}}$

$= 420$ litres

$\frac{420}{2} = 210$ seconds

.....210.....

(Total for question 10 is 4 marks)

11 The total surface area of a cube is 150 cm^2.

Work out the volume of the cube.

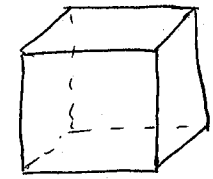

$\frac{150}{6} = 25$ cm^2 each face 6 faces

$\boxed{25\text{cm}^2}$ $\sqrt{25} = 5$ cm

volume $= 5 \times 5 \times 5$
$= 125$ cm^3

125 cm^3

(Total for question 11 is 4 marks)

---

12 The diagram shows a water container.

The container is $\frac{2}{3}$ full with water.

The water is going to be used to fill cups.
Each cup golds 175 ml of water.

How many cups of water can be completely filled with water from the container

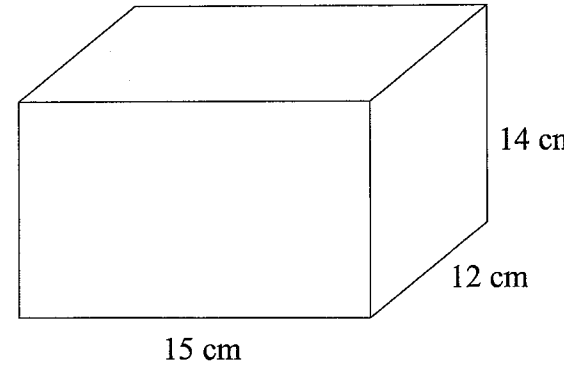

volume $= 15 \times 12 \times 14$
$= 180 \times 14$
$= 2520$ cm^3

$180 \times 10 = 1800$
$180 \times 4 = 720$
2520

$\frac{2}{3}$ $\frac{2}{3} \times 2520 = \frac{5040}{3}$

$3 \overline{)5040}$ = 1680

$= 1680$ cm^3 (WATER)

$= 1680$ ml

1750 ml = 10 cups
1575 ml = 9 cups

9

(Total for question 12 is 4 marks)

13 Here is a triangular prism.

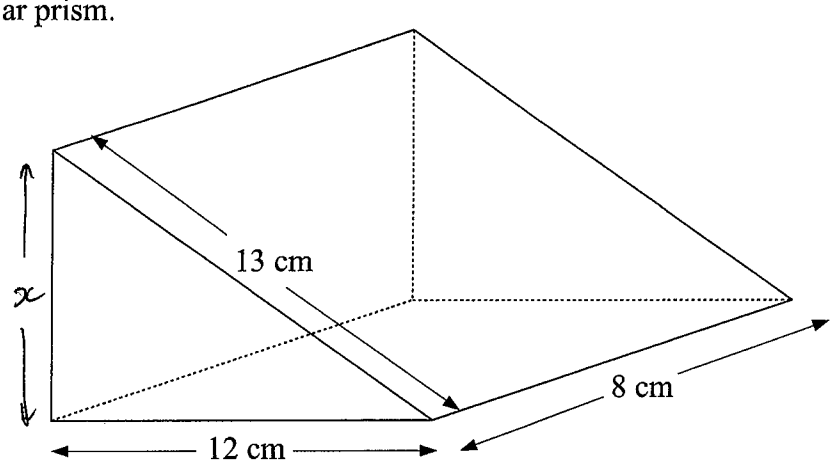

The diagram shows a triangular prism.
The cross-section of the prism is a right angled triangle.

Calculate the volume of the prism.

$x^2 + 12^2 = 13^2$

$x^2 = 13^2 - 12^2$

$x^2 = 169 - 144$

$x^2 = 25$

$x = \sqrt{25} = 5$

Area of cross section $= \frac{5 \times 12}{2}$

$= 30 \text{ cm}^2$

Volume $= 30 \times 8$

$= 240 \text{ cm}^3$

.....240.....cm^3

(Total for question 13 is 5 marks)