1 Here are four angles A, B , C and D.

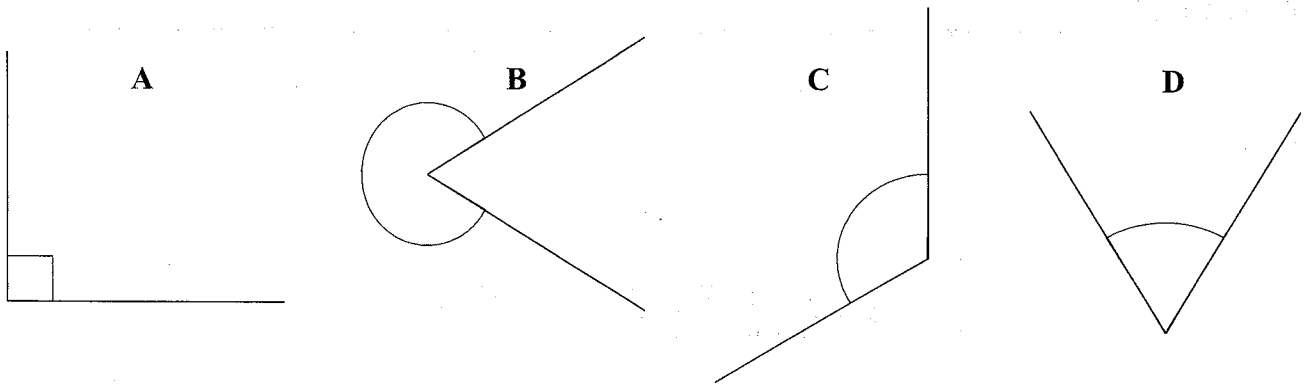

(a) Measure the size of angle C.

120 °

(b) Match the angle mathematical name to the angle.

Mathematical Name	Angle
Acute Angle	D
Obtuse Angle	C
Right Angle	A
Reflex Angle	B

(Total for question 7 is 3 marks)

2 In the space below draw an angle of 60°
Label the angle *A*.

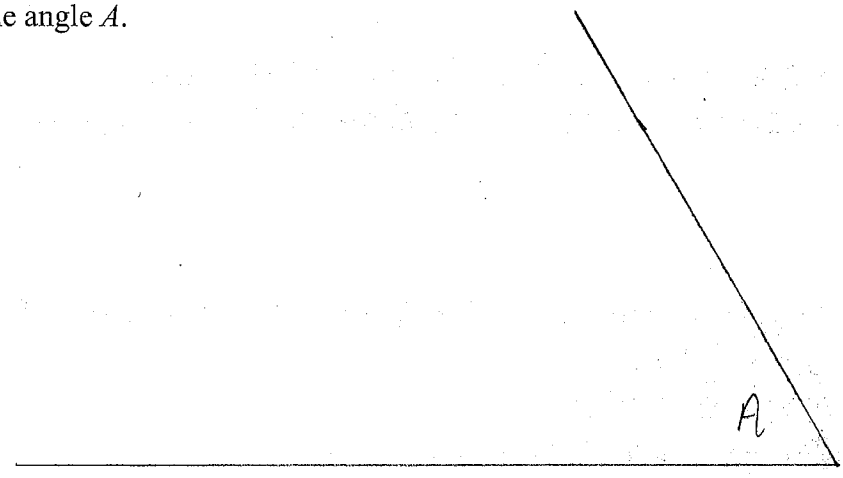

(Total for question 2 is 1 mark)

3 In the space below draw an angle of 110°
Label the angle *B*.

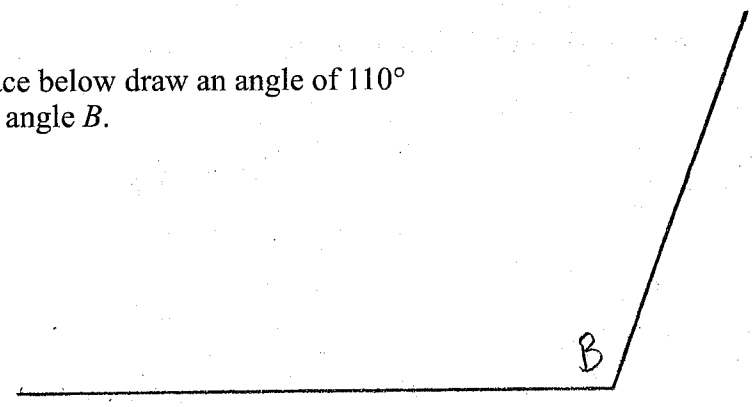

(Total for question 3 is 1 mark)

Diagrams are NOT accurately drawn, unless otherwise indicated.

4 *ABC* is a straight line. Work out the size of the angle marked *x*.

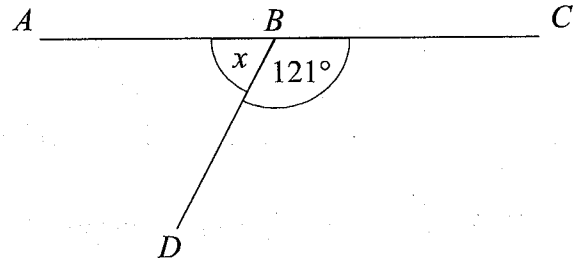

180 − 121

59 °

(Total for question 4 is 2 marks)

5 Work out the size of the angle marked *x*.

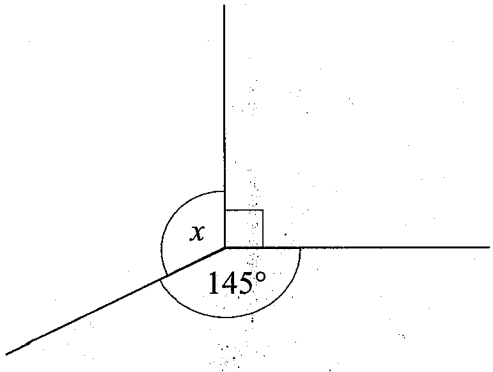

90 + 145 = 235

360 − 235 = 125

125 °

(Total for question 5 is 2 marks)

6 *AB* and *BC* are perpendicular lines. Work out the size of the angle marked *x*.

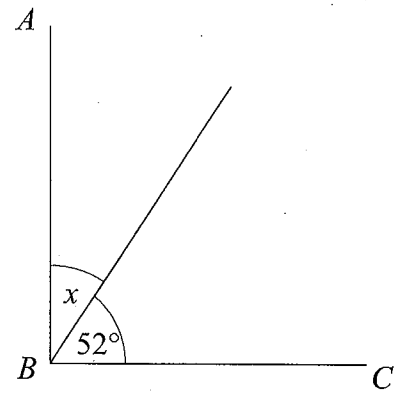

90 − 52

38 °

(Total for question 6 is 2 marks)

7 *ABC* is an isosceles triangle Work out the size of the angle marked *x*.

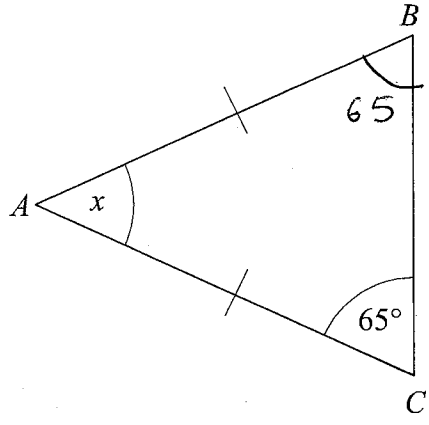

65 + 65 = 130

180 − 130 = 50

50 °

(Total for question 7 is 2 marks)

8

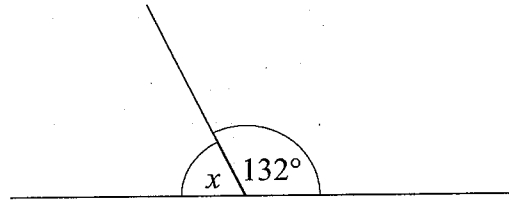

(a) Work out the size of the angle marked x.

180 − 132

48 °

(b) Give a reason for your answer.

Angles on a straight line add to 180°

(Total for question 8 is 2 marks)

9 The diagram shows a square $ABDE$ and an equilateral triangle BCD.

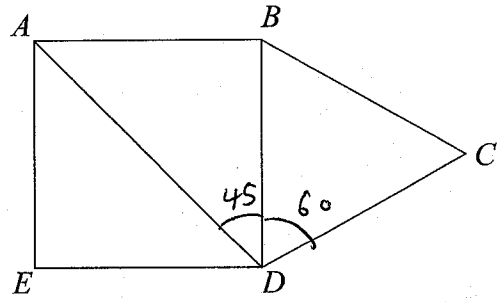

(a) Write down the size of angle ABD

90 °

(b) Write down the size of angle BCD

60 °

(c) Find the size of angle ADC

45 + 60

105 °

(Total for question 9 is 4 marks)

10

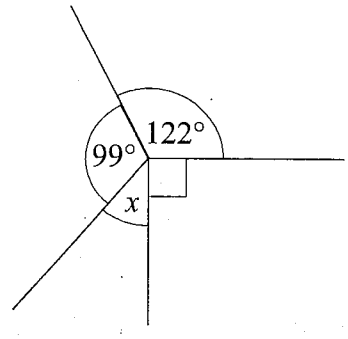

99 + 122 = 221

221 + 90 = 311

360 − 311 = 49

(a) Work out the size of the angle marked x.

49 °

(b) Give a reason for your answer.

Angles around a point add to 360°

(Total for question 10 is 2 marks)

11

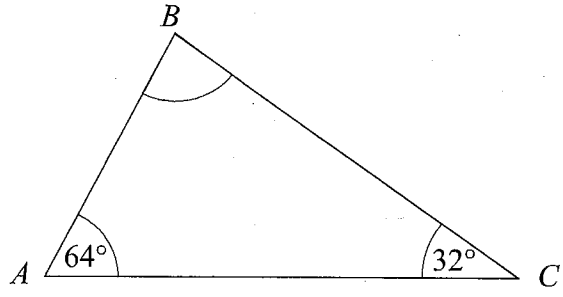

64 + 32 = 96

180 − 96 = 84

(a) Work out the size of the angle ABC.

84 °

(b) Give a reason for your answer.

Angles in a triangle add to 180°

(Total for question 11 is 2 marks)

12 *ABC* is a straight line. Work out the size of the angle *BDC*.

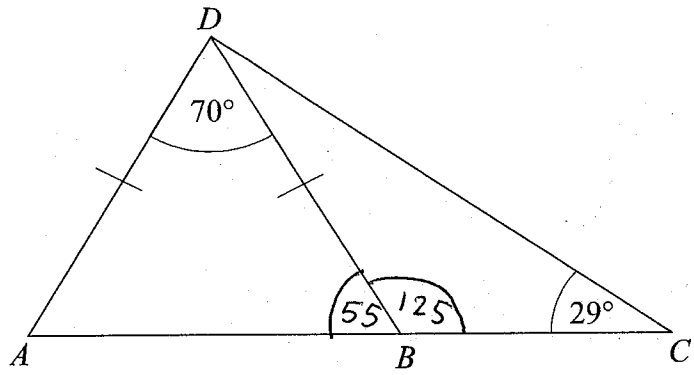

180 − 70 = 110

$\frac{110}{2}$ = 55

180 − 55 = 125

125 + 29 = 154

180 − 154 = 26

26 °

(Total for question 12 is 4 marks)

13

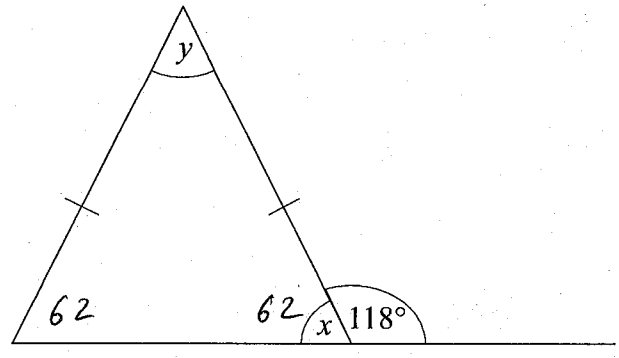

(a) Work out the size of the angle marked *x*.

180 − 118

62 °

(b) Work out the size of the angle marked *y*.

62 + 62 = 124

180 − 124

56 °

(c) Give a reason for your answer.

Angles at the base of an isosceles triangle are equal AND angles in a triangle add to 180°

(Total for question 13 is 3 marks)

14 *ABC* is a straight line.

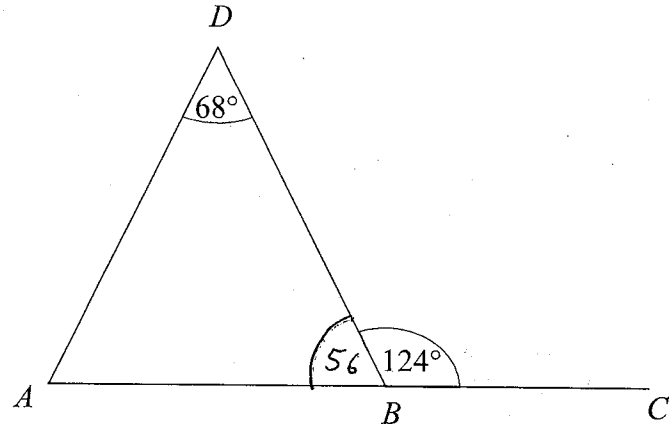

180 − 124 = 56

Show that *ABD* is an isosceles triangle

ABD = 56° Angles on a straight line add to 180°

56 + 68 = 124

180 − 124 = 56

~~A~~ DAB = 56° Angles in a triangle add to 180°

Two angles equal ∴ isosceles triangle

(Total for question 14 is 4 marks)