Name: _____

Year 9

End of Year Assessment Revision Resource

Part 1: Topics & Sparx Clips

Part 2: Practice Questions

Topics & Sparx Clips

Topic	Strand	Sparx clips
Place value & Number Properties	Number	U922, U600, U435, U947, U742, U548
Decimals	Number	U417, U478, M462, U735, U127, U293, U453, U868, U976
Estimation and Rounding	Number	U480, U298, U731, U965, U225, U657, U587, U108, U301
Indices Powers & Roots	Number	U851, U235, U694, U985, U772, U299
Factors, Multiples & Primes	Number	U211, U751, U529, U236, U739, U250
Ratio	Ratio, Proportion & Rates of Change	U687, M543, U577, U595, U176, U257, U921, U753
FDP	Number	U704, U646, U888, U746, U594, M701, U550
Fractions	Number	U736, U692, U793, U475, U224, U544, U538, U881, U916, U163
Percentages	Number	U554, U349, U773, U671, U286, U278, U533
Proportion	Ratio, Proportion & Rates of Change	U721, U610, U357, U640, U407, U364, U138, U238
Notation	Algebra	M795, U613, M830
Simplifying & Index Laws	Algebra	U105, U622, U103, U437, U685, U457, U824
Expanding & Factorising	Algebra	U179, U365, U768, U178, U963
Expressions & Substitution	Algebra	M175, M428, U201, U585, U144
Linear Equations	Algebra	U755, U325, U585, U144, U870, U599, U505
Linear Inequalities	Algebra	U759, U509, U738, U145
Perimeter & Area	Geometry & Measure	M635, U351, U889, U993, U945, U424, U265, U970, U575, U226, U934, U343, U904, U102, U497, M515, U388, U248

Pythagoras	Geometry & Measure	U851, U385, U541
Properties of shapes	Geometry & Measure	U789, U849, U121, U719, U628
Angle facts	Geometry & Measure	U447, U390, U730, U628, U732, U329, M985, U427
Parallel lines	Geometry & Measure	U826, U655
Circles	Geometry & Measure	U767, U604, U950, U221, U373
Volume	Geometry & Measure	U786, U174, U915, U484, U116, U617, U350, U543, U468

Practice Questions

Q1.

Fill in a **negative** number to make the inequality correct.

$-3 < \boxed{}$

[1 mark]

Q2.

Look at the diagram.

It shows how to change metres into centimetres and millimetres.

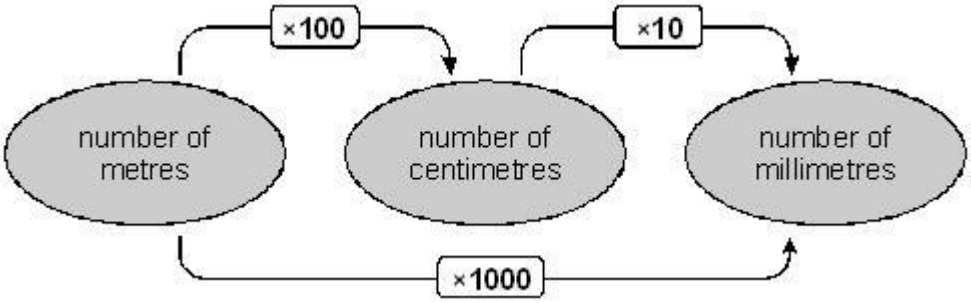

(a) Change **5 metres** into centimetres.

Answer _____ centimetres

[1 mark]

(b) Change **9 centimetres** into millimetres.

Answer _____ millimetres

[1 mark]

(c) Change **8000 millimetres** into metres.

Answer _____ metres

[1 mark]

Q3.

n is an integer.

$$5 < 2n \leq 20$$

Write down all the possible values of n.

_____

_____

_____

Answer _____

[3 marks]

Q4.

Work out 8.3 × 6

_____

_____

_____

_____

Answer _____

[2 marks]

Q5.

(a) Factorise $10x - 15$

Answer _____

[1 mark]

(b) Factorise $x^2 + 8x$

Answer _____

[1 mark]

Q6.

Work out

$$\frac{1}{4} + \frac{1}{3} =$$

$$\frac{3}{5} - \frac{1}{15} =$$

[3 marks]

Q7. CALCULATOR ALLOWED

The cuboid container below holds **12 litres** of water when full.

One litre is 1000 cm^3

The inside length and width of the cuboid are **40 cm** and **20 cm**.

What is the inside **height** of the cuboid?

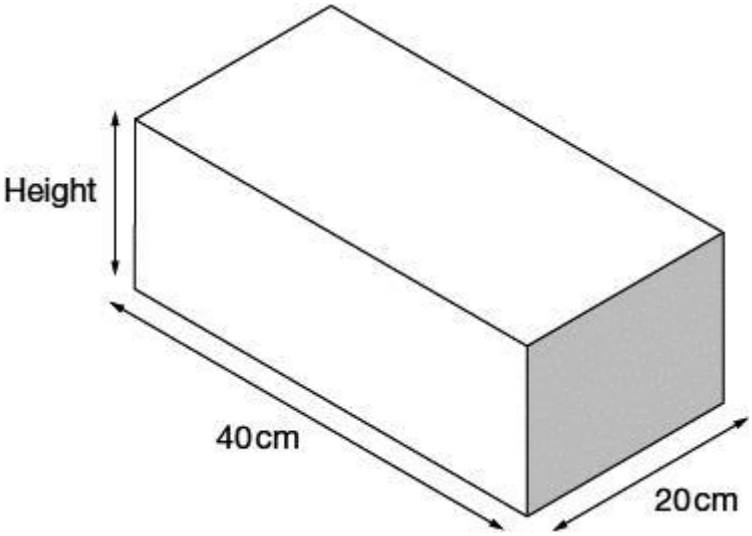

Not drawn accurately

_____

_____

_____

_____

Height = _____ cm

[2 marks]

Q8.

In a quiz, Ravi answered **24** out of **40** questions correctly.

What **percentage** of the questions did he answer correctly?

_____

_____

Answer _____%

[1 mark]

Q9.

Here is part of a newspaper report about wildlife in a country in Africa.

> The number of gorillas has **fallen by 70%** in the last ten years.
> Only about **5000 gorillas** are left.

About how many gorillas were there in this country ten years earlier?

_____

_____

_____

_____

Answer _____

[2 marks]

Q10.

Work out $8\frac{1}{6} - 2\frac{3}{5}$

Give your answer as a mixed number.

_____

_____

_____

_____

_____

_____

Answer _____

[3 marks]

Q11.

The diagram shows a kite.

The side lengths are in centimetres.

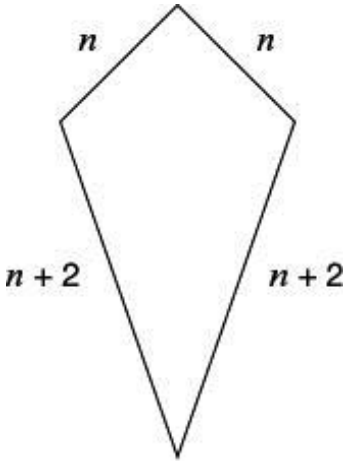

Not drawn accurately

(a) When $\boldsymbol{n} = \mathbf{9}$, what is the perimeter of the kite?

_____

_____

Answer _____ cm

[1 mark]

(b) When the perimeter of the kite is **100 cm**, what is the value of n?

_____

_____

_____

_____

n = _____

[2 marks]

Q12.

Write numbers in the boxes so that the fractions are in size order.

$$\frac{1}{4} \qquad \frac{\square}{7} \qquad \frac{1}{\square} \qquad \frac{3}{5} \qquad \frac{2}{\square}$$

[2 marks]

Q13.

(a) Look at this information about recycling:

25 large plastic bottles can be recycled to make **1** fleece jacket.

Write the missing number in this sentence.

200 large plastic bottles can be recycled to make _____ fleece jackets.

[1 mark]

(b) In a survey, **9 out of 10** people said they would like to recycle more.

What percentage of people said they would like to recycle more?

_____

_____

Answer _____ %

[1 mark]

Q14. CALCULATOR ALLOWED

A meal in a restaurant costs the same for each person.

For **11** people the total cost is **£253**

What is the total cost for 12 people?

_____

_____

_____

_____

£ _____

[2 marks]

Q15.

Simplify the ratio 18 : 15

_____

_____

Answer _____

[1 mark]

Q16.

(a) Write the missing numbers in the sentences below.

2735 rounded to the **nearest hundred** is _____

[1 mark]

2735 rounded to the **nearest thousand** is _____

[1 mark]

(b) Give an example of what the missing number could be in the sentence below.

_____ rounded to the **nearest ten** is **800**

[1 mark]

Q17.

(a) Use **£1 = 9.60 francs** to work out how much **45p** is in francs.

You **must** show your working.

_____

_____

_____

45p = _____ francs

[2 marks]

(b) Use **240 pesetas = £1** to work out how much **408 pesetas** is in pounds.

You **must** show your working.

_____

_____

_____

408 pesetas = £ _____

[2 marks]

(c) Use £1 = 9.60 francs and £1 = 240 pesetas to work out how much **1 franc** is in **pesetas**.

You **must** show your working.

_____

_____

_____

1 franc = _____ pesetas

[2 marks]

Q18.

Work out the values of m and n

$$5^8 \times 5^4 = 5^m$$

_____

_____

m = _____

[1 mark]

$$\frac{5^8}{5^4} = 5^n$$

_____

_____

n = _____

[1 mark]

Q19. CALCULATOR ALLOWED

The price of a coat is £65

In a sale the price is **reduced** by **15%**

What is the sale price of the coat?

_____

_____

_____

_____

£ _____

[2 marks]

Q20.

P and *Q* are vertices of a regular polygon.

The exterior angle at *Q* is 30°

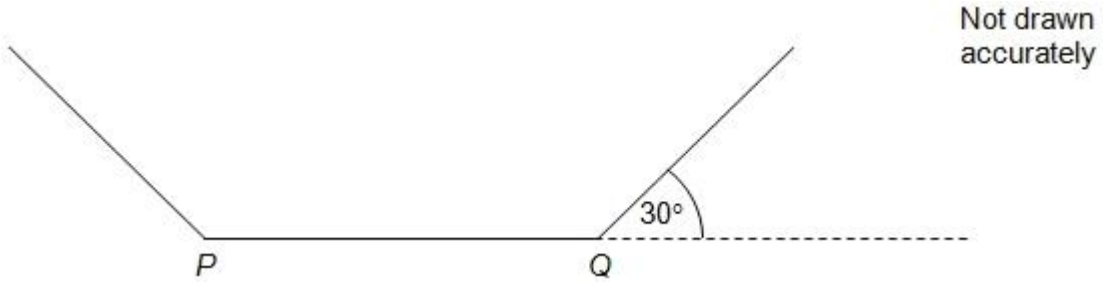

How many sides does the polygon have?

_____

_____

_____

Answer _____

[2 marks]

Q21.

70 written as the product of prime factors is $2 \times 5 \times 7$

(a) Write 84 as the product of prime factors.

_____

_____

_____

_____

Answer _____

[2 marks]

(b) Work out the highest common factor (HCF) of 84 and 70

_____

Answer _____

[1 mark]

(c) Work out the least common multiple (LCM) of 84 and 70

_____

Answer _____

[1 mark]

Q22.

Which is bigger? 2^3 or $\sqrt{65}$

Give a reason for your answer.

_____

_____

_____

_____

[2 marks]

Q23.

Round these numbers to one decimal place.

One has been done for you.

Number	To nearest one decimal place
12.72	12.7
10.16	
672.09	
24.81	

[2 marks]

Q24.

(a) Share £35 in the ratio 4 : 1

_____

_____

_____

_____

£ _____ : £ _____

[2 marks]

(b) Two friends share some money in the ratio 7 : 2

What fraction of the money does the first friend receive?

Answer _____

[1 mark]

(c) Harry and Sunil each have the same amount of money.

Harry wants Sunil to have £5 more than him.

How much should he give to Sunil?

_____

_____

£_____

[1 mark]

Q25.

Here is an equation.

$$x^y = 64$$

Give four **different** pairs of values that satisfy this equation.

First pair	x = _____	y = _____
Second pair	x = _____	y = _____
Third pair	x = _____	y = _____
Fourth pair	x = _____	y = _____

[3 marks]

Q26.

Dan says:

*'All **factors of 70** are even numbers.'*

Is he correct?

Tick (✓) Yes or No.

☐ Yes ☐ No

Explain your answer.

_____

_____

[1 mark]

Q27.

(a) The diagram shows a **rhombus**.

One angle is 46°

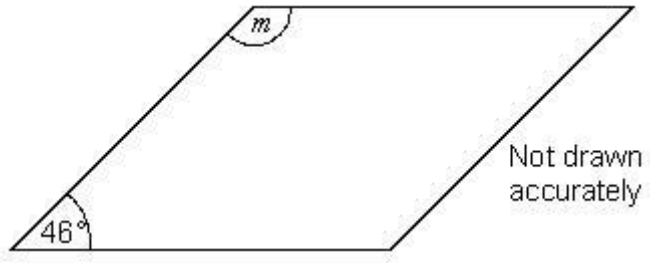

Calculate the size of the angle marked m

You **must** show your working.

_____

_____

_____

Answer _____ °

[2 marks]

Q28.

Multiply out these expressions.

Write your answers as simply as possible.

$5(x + 2) + 3(7 + x)$

_____

_____

_____

[2 marks]

$(x + 2)(x + 5)$

_____

_____

_____

[2 marks]

Q29.

Solve this equation.

$$\frac{2n + 5}{3} = 11$$

_____

_____

_____

_____

n = _____

[2 marks]

Q30. CALCULATOR ALLOWED

This door wedge is the shape of a prism.

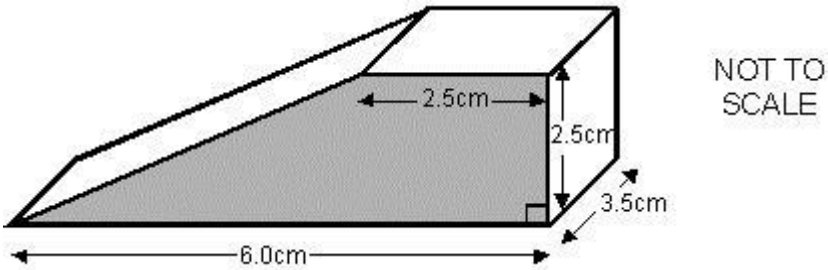

(a) The shaded face of the door wedge is a trapezium.

Calculate the area of the shaded face.

You **must** show your working.

_____

_____

_____

_____

Answer _____ cm^2

[2 marks]

(b) Calculate the volume of the door wedge.

You **must** show your working.

_____

_____

Answer _____ cm^3

[1 mark]

Q31.

The triangle lies between two parallel lines.

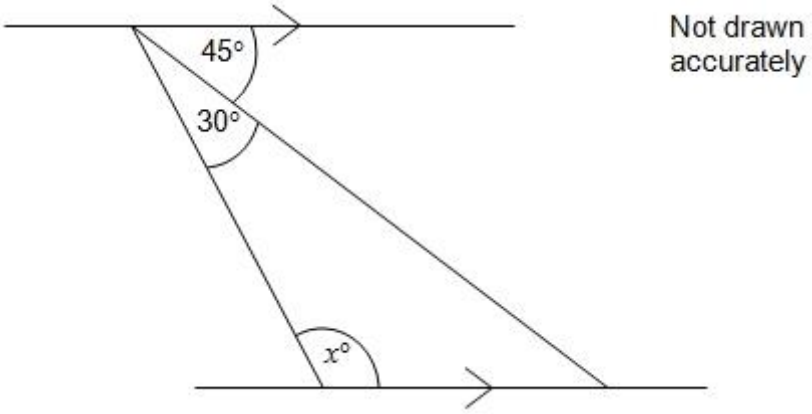

Work out the value of x.

_____

_____

_____

Answer _____ degrees

[2 marks]

Q32.

Calculate **57.3 × 2.1**

You **must** show your working.

_____

_____

_____

_____

Answer _____

[2 marks]

Q33.

(a) The square and the rectangle below have the **same area**.

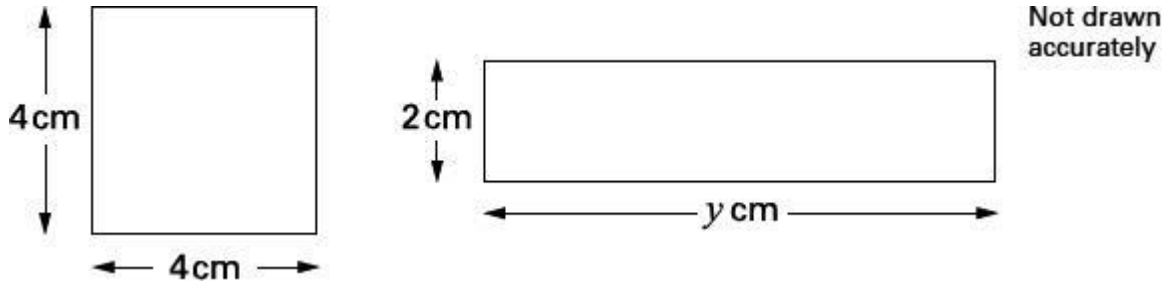

Work out the value of y

y = _____ cm

[1 mark]

(b) The triangle and the rectangle below have the **same area**.

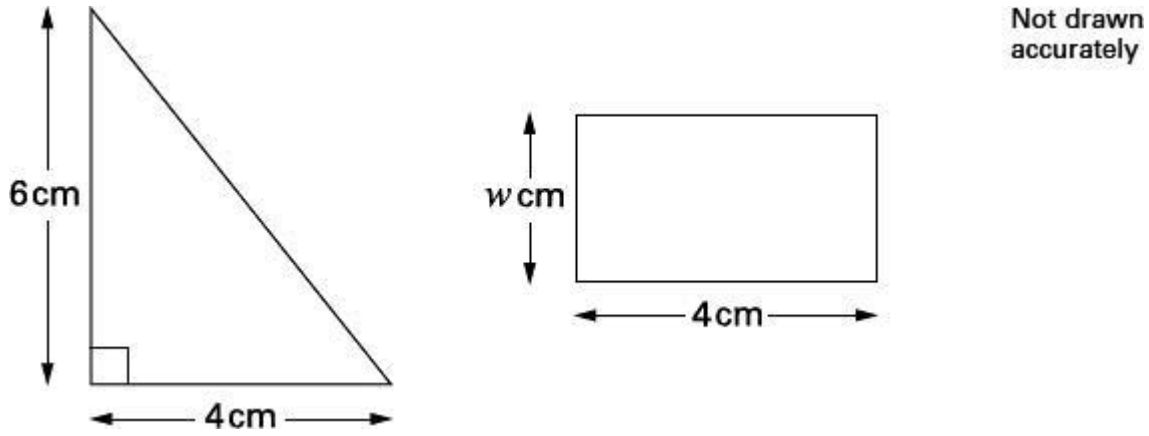

Work out the value of w

You **must** show your working.

w = _____ cm

[2 marks]

Q34. CALCULATOR ALLOWED

The diagram shows parts of two circles, sector A and sector B

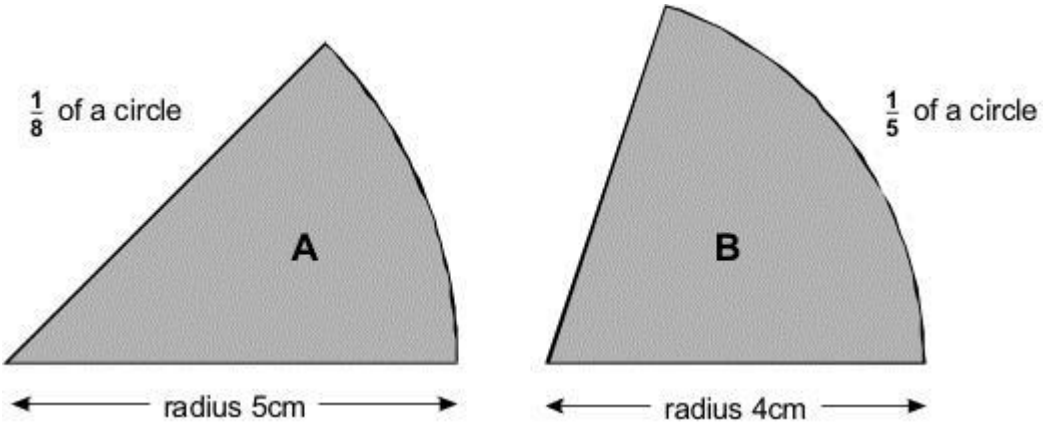

(a) Which sector has the **bigger area**?

You **must** show your working to explain your answer.

_____

_____

_____

_____

[2 marks]

(b) The perimeter of a sector is made from two straight lines and an arc.

Which sector has the **bigger perimeter**?

You **must** show your working to explain your answer.

_____

_____

_____

_____

[2 marks]

Q35.

(a) Factorise $x^2 + 7x + 10$

_____

_____

Answer _____

[1 mark]

(b) Factorise $x^2 - 25$

_____

_____

Answer _____

[1 mark]

Q36. CALCULATOR ALLOWED

The diagram shows a plan of Luke's new lawn.

The lawn is a circle with radius 3 m.

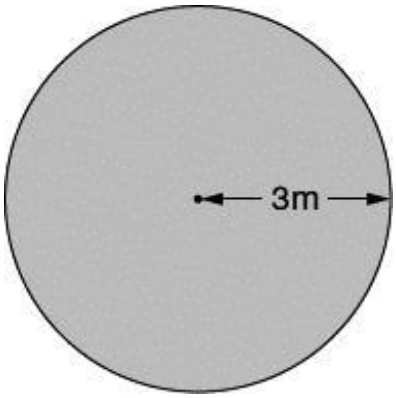

Work out the area of the lawn.

_____

_____

_____

_____

Answer _____ m^2

[2 marks]

Q37. CALCULATOR ALLOWED

Look at this triangle.

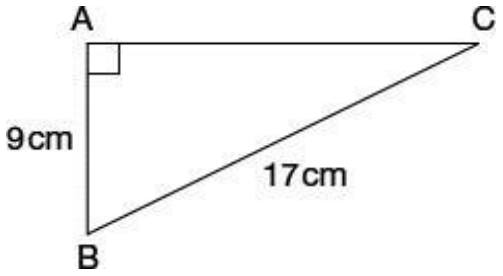

Not drawn accurately

Work out length AC.

_____

_____

_____

_____

AC = _____ cm

[2 marks]

Answers

1	Any number a such that $-3 < a < 0$ e.g. −1, −2, −1.5
2	(a) 500 1 (b) 90 1 (c) 8 1
3	3, 4, 5, 6, 7, 8, 9, 10
4	49.8
5	(a) $5(2x - 3)$ B1 (b) $x(x + 8)$
6	$\frac{7}{12}$ or equivalent
7	15
8	60
9	Integer value between 16 500 and 17 000
10	$5\frac{17}{30}$
11	(a) 40 (b) 24
12	2 2 3 or 3 2 3 or 2 3 3

13	(a) 8 (b) 90
14	£ 276
15	6 : 5
16	(a) 2700 3000 (b) A value greater than or equal to 795 but less than 805
17	(a) **For 2m** indicates the correct amount, eg: • 4.32 (b) **For 2m** indicates the correct amount with no evidence of an incorrect method, eg: • 1.70 (c) **For 2m** indicates 25
18	12 4
19	£ 55.25
20	12
21	(a) 2 × 2 × 3 × 7 $2^2 \times 3 \times 7$ (b) 14 (c) 420 B1
22	$\sqrt{65}$ bigger as $\sqrt{64}$ is 8
23	

number	To nearest one decimal place
12.72	12.7
10.16	**10.2**
672.09	**672.1**
24.81	**24.8**

24	(a) 35 ÷ (4 + 1) M1 28 : 7 (b) $\frac{7}{9}$ B1 (c) 2.50
25	Four different correct pairs of values for *x* and *y* eg • *x* = 64 *y* = 1 *x* = 8 *y* = 2 *x* = 4 *y* = 3 *x* = 2 *y* = 6 • *x* = $\frac{1}{64}$ *y* = –1 *x* = 4096 *y* = $\frac{1}{2}$ *x* = √8 *y* = 4 *x* = –8 *y* = 2
26	No and gives a correct explanation that shows at least one odd factor
27	134
28	8*x* + 31
29	14
30	(a) **For 2m** indicates value is 10.625 rounded or truncated to 1 or more decimal places, eg: • 10.625 • 10.62 • 10.6 (b) Indicates value is 37.1875 rounded or truncated to 1 or more decimal places, eg: • 37.1875 • 37.19 • 37.2
31	105
32	120.33

33	(a) 8 (b) 3	1
34	(a) **B**, and a correct explanation eg • 3.2π > 3.125π • A is 9.8(...), B is over 10 • A is 125π ÷ 40 but B is 128π ÷ 40 (b) **A**, and a correct explanation eg • 13.92699... > 13.02654...	
35	(a) $(x + 2)(x + 5)$ *Either order* (b) $(x + 5)(x - 5)$ *Either order*	
36	28.(…) or 9π	
37	14.4(…), or 4√13, or √208	