Write your name here

Surname	Other names

Pearson Edexcel
Level 1 / Level 2
GCSE (9–1)

Centre Number | Candidate Number

Mathematics

Paper 2 (Calculator)

Foundation Tier

Thursday 8 June 2017 – Morning
Time: 1 hour 30 minutes

Paper Reference
1MA1/2F

You must have: Ruler graduated in centimetres and millimetres, protractor, pair of compasses, pen, HB pencil, eraser, calculator. Tracing paper may be used.

Total Marks

Instructions

- Use **black** ink or ball-point pen.
- **Fill in the boxes** at the top of this page with your name, centre number and candidate number.
- Answer **all** questions.
- Answer the questions in the spaces provided – *there may be more space than you need.*
- You must **show all your working**.
- Diagrams are **NOT** accurately drawn, unless otherwise indicated.
- **Calculators may be used.**
- If your calculator does not have a π button, take the value of π to be 3.142 unless the question instructs otherwise.

Information

- The total mark for this paper is 80
- The marks for **each** question are shown in brackets – *use this as a guide as to how much time to spend on each question.*

Advice

- Read each question carefully before you start to answer it.
- Keep an eye on the time.
- Try to answer every question.
- Check your answers if you have time at the end.

Turn over ▶

©2017 Pearson Education Ltd.
6/6/6/6/6/4/

P 4 8 8 5 5 A 0 1 2 4

Pearson

Answer ALL questions.

Write your answers in the spaces provided.

You must write down all the stages in your working.

1 (a) Simplify $5p - 3p + p$

.....

(1)

(b) Simplify $m^3 + m^3$

.....

(1)

(c) Simplify $10 + 3c + 5d - 7c + d$

.....

(2)

(Total for Question 1 is 4 marks)

---

2 Write 56.78 correct to one significant figure.

.....

(Total for Question 2 is 1 mark)

DO NOT WRITE IN THIS AREA
DO NOT WRITE IN THIS AREA
DO NOT WRITE IN THIS AREA

3 A teacher asks the students in Year 6 what type of transport they use to get to school.
The dual bar chart shows some of the results.

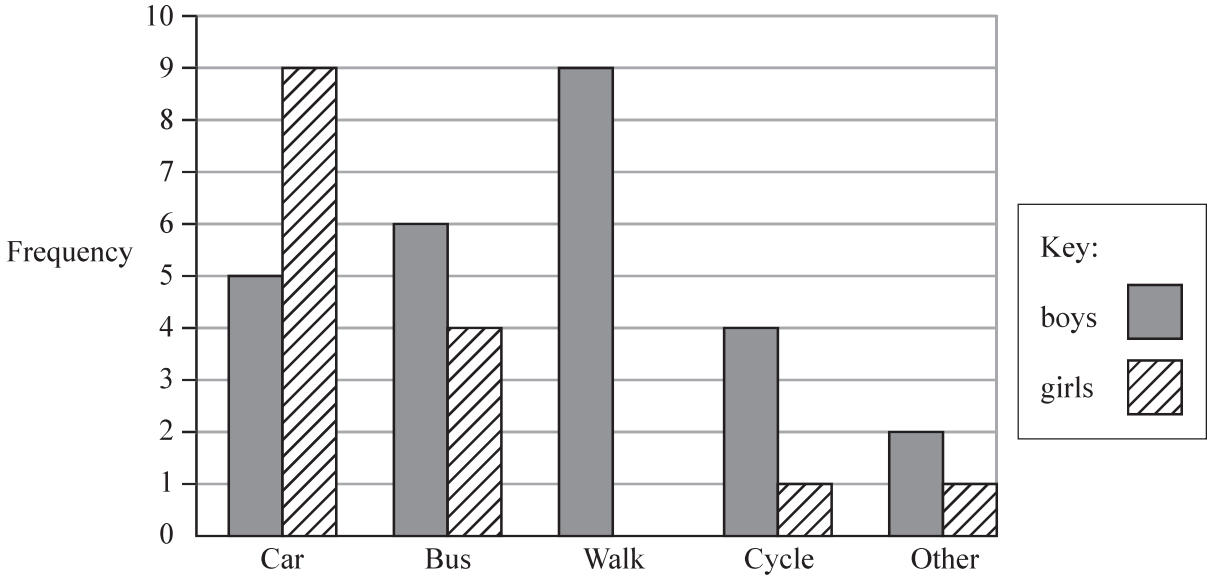

(a) What is the most popular type of transport used by the boys?

.....

(1)

7 girls walk to school.

(b) Show this information on the dual bar chart.

(1)

More of the students get to school by car than by bus.

(c) How many more?

.....

(1)

The number of students in Year 5 is the same as the number of students in Year 6

(d) What is the total number of students in Years 5 and 6?

.....

(2)

(Total for Question 3 is 5 marks)

DO NOT WRITE IN THIS AREA
DO NOT WRITE IN THIS AREA
DO NOT WRITE IN THIS AREA

4 Here are four fractions.

$$\frac{2}{5} \qquad \frac{11}{30} \qquad \frac{1}{2} \qquad \frac{7}{15}$$

Write these fractions in order of size.
Start with the smallest fraction.

.....

(Total for Question 4 is 2 marks)

DO NOT WRITE IN THIS AREA
DO NOT WRITE IN THIS AREA
DO NOT WRITE IN THIS AREA

DO NOT WRITE IN THIS AREA
DO NOT WRITE IN THIS AREA
DO NOT WRITE IN THIS AREA

5 David sells CDs in a shop.

The tally chart shows information about the number of CDs David sold on Monday, on Tuesday and on Wednesday.

	Tally	Frequency
Monday	卌 卌 |||	12
Tuesday	卌 卌 卌 |||	18
Wednesday	卌 |||	8

(a) Write down **one** thing that is wrong with the tally chart.

.....

.....

(1)

David drew this pictogram to show the information for Tuesday and Wednesday.

Tuesday	◐ ◐ ◐ ◐ ◐
Wednesday	◐ ◐ ◖

Key: ◐ represents 3 CDs

(b) Write down **one** thing that is wrong with this pictogram.

.....

.....

(1)

(Total for Question 5 is 2 marks)

6 There are 495 coins in a bottle.

$\frac{1}{3}$ of the coins are £1 coins.
124 of the coins are 50p coins.
The rest of the coins are 20p coins.

Work out the total value of the 495 coins.

£.....

(Total for Question 6 is 4 marks)

DO NOT WRITE IN THIS AREA
DO NOT WRITE IN THIS AREA
DO NOT WRITE IN THIS AREA

7 The probability that a new fridge has a fault is 0.015

What is the probability that a new fridge does **not** have a fault?

.....

(Total for Question 7 is 1 mark)

8 Here is a list of numbers.

21 22 23 24 25 26 27 28 29

(a) From the numbers in the list, write down a square number.

.....

(1)

(b) From the numbers in the list, write down a number that is a multiple of **both** 4 and 6

.....

(1)

(c) Write down all the prime numbers in the list.

.....

(1)

(Total for Question 8 is 3 marks)

DO NOT WRITE IN THIS AREA
DO NOT WRITE IN THIS AREA
DO NOT WRITE IN THIS AREA

9

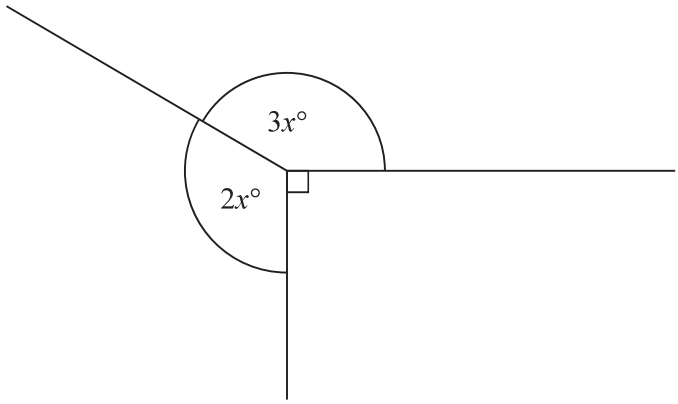

Find the value of x.

.....

(Total for Question 9 is 3 marks)

DO NOT WRITE IN THIS AREA
DO NOT WRITE IN THIS AREA
DO NOT WRITE IN THIS AREA

10 Suha is going to buy 150 envelopes.

Here is some information about the cost of envelopes in two shops.

Letters2send	**Stationery World**
Pack of 25 envelopes for £3.49	Pack of 10 envelopes for £2.10 Buy 2 packs get 1 pack free

Suha wants to buy the envelopes as cheaply as possible.

Which shop should Suha buy the 150 envelopes from?
You must show how you get your answer.

(Total for Question 10 is 4 marks)

DO NOT WRITE IN THIS AREA
DO NOT WRITE IN THIS AREA
DO NOT WRITE IN THIS AREA

11 You can use this graph to change between inches and centimetres.

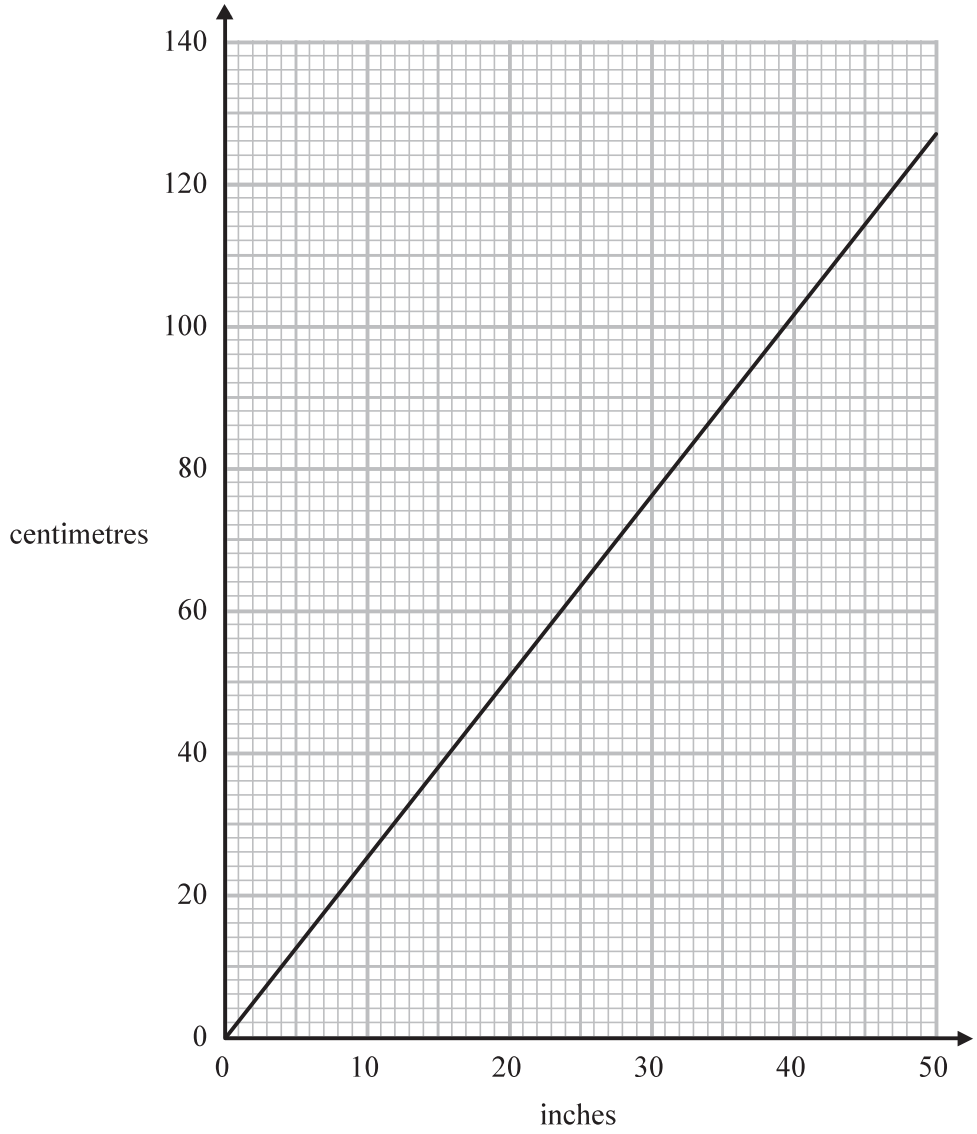

(a) Change 74 cm to inches.

..... inches

(1)

DO NOT WRITE IN THIS AREA
DO NOT WRITE IN THIS AREA
DO NOT WRITE IN THIS AREA

Daniel's height is 6 feet 3 inches.

1 foot = 12 inches

(b) What is Daniel's height in centimetres?

..... centimetres
(3)

(Total for Question 11 is 4 marks)

---

12 Find the value of $\dfrac{\sqrt{13.4 - 1.5}}{(6.8 + 0.06)^2}$

Write down all the figures on your calculator display.

.....

(Total for Question 12 is 2 marks)

DO NOT WRITE IN THIS AREA
DO NOT WRITE IN THIS AREA
DO NOT WRITE IN THIS AREA

13

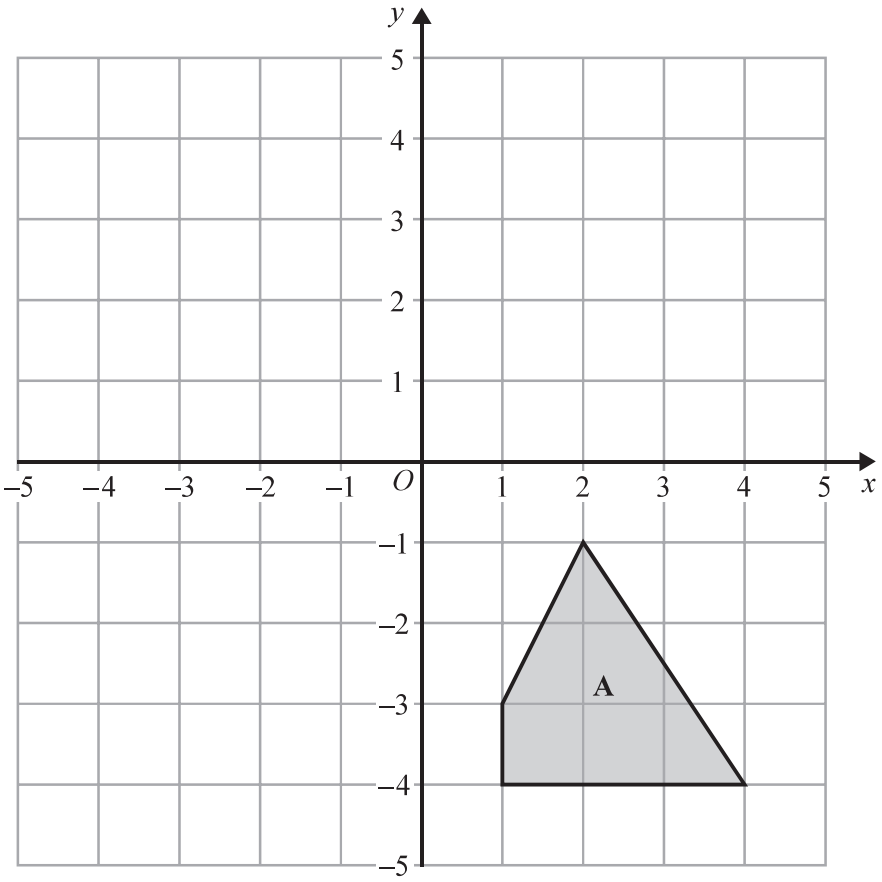

(a) Rotate shape **A** 90° clockwise about centre *O*.

(2)

DO NOT WRITE IN THIS AREA
DO NOT WRITE IN THIS AREA
DO NOT WRITE IN THIS AREA

DO NOT WRITE IN THIS AREA
DO NOT WRITE IN THIS AREA
DO NOT WRITE IN THIS AREA

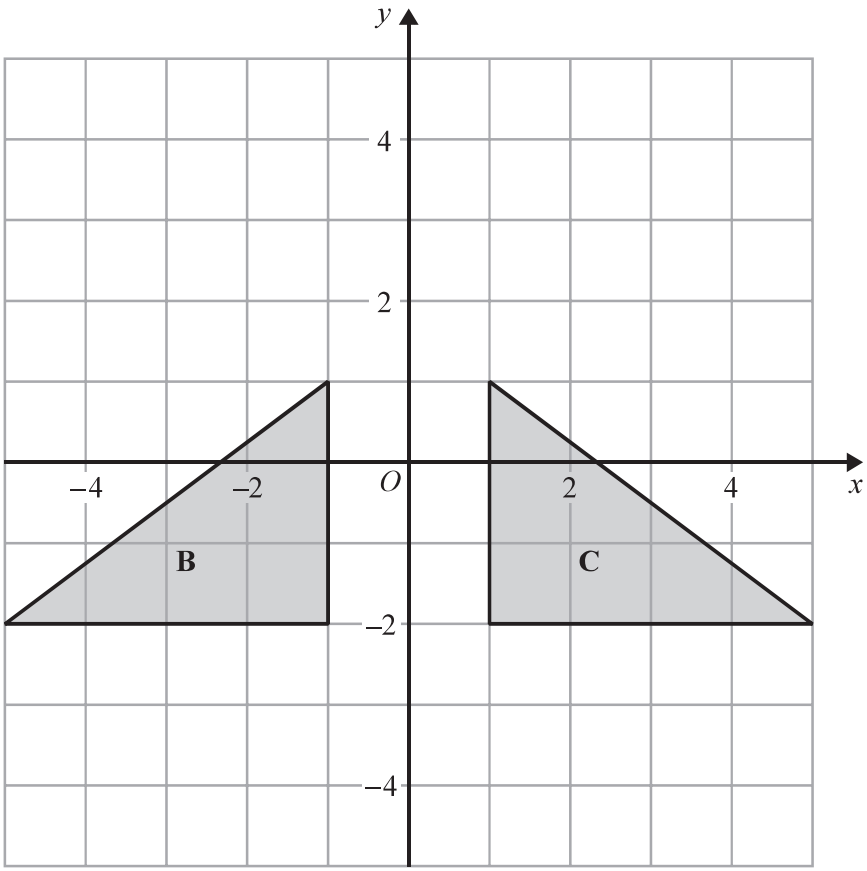

(b) Describe fully the single transformation that maps triangle **B** onto triangle **C**.

.....

.....

(2)

(Total for Question 13 is 4 marks)

14 (a) Factorise $5 - 10m$

.....

(1)

(b) Factorise fully $2a^2b + 6ab^2$

.....

(2)

(Total for Question 14 is 3 marks)

---

15 (a) Write 4.7×10^{-1} as an ordinary number.

.....

(1)

(b) Work out the value of $(2.4 \times 10^3) \times (9.5 \times 10^5)$
Give your answer in standard form.

.....

(2)

(Total for Question 15 is 3 marks)

DO NOT WRITE IN THIS AREA
DO NOT WRITE IN THIS AREA
DO NOT WRITE IN THIS AREA

16 A, B and C are three points on a map.

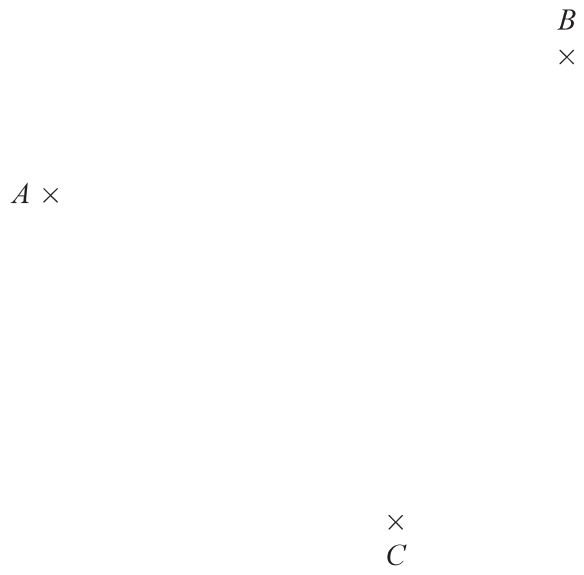

1 cm represents 100 metres.

Point T is 250 metres from point A.
Point T is equidistant from point B and point C.

On the map, show one of the possible positions for point T.

(Total for Question 16 is 3 marks)

DO NOT WRITE IN THIS AREA
DO NOT WRITE IN THIS AREA
DO NOT WRITE IN THIS AREA

17 The table shows the probabilities that a biased dice will land on 2, on 3, on 4, on 5 and on 6

Number on dice	**1**	**2**	**3**	**4**	**5**	**6**
Probability		0.17	0.18	0.09	0.15	0.1

Neymar rolls the biased dice 200 times.

Work out an estimate for the total number of times the dice will land on 1 or on 3

.....

(Total for Question 17 is 3 marks)

DO NOT WRITE IN THIS AREA
DO NOT WRITE IN THIS AREA
DO NOT WRITE IN THIS AREA

18 On Saturday, some adults and some children were in a theatre.
The ratio of the number of adults to the number of children was 5 : 2

Each person had a seat in the Circle or had a seat in the Stalls.

$\frac{3}{4}$ of the children had seats in the Stalls.
117 children had seats in the Circle.

There are exactly 2600 seats in the theatre.

On this Saturday, were there people on more than 60% of the seats?
You must show how you get your answer.

(Total for Question 18 is 5 marks)

DO NOT WRITE IN THIS AREA
DO NOT WRITE IN THIS AREA
DO NOT WRITE IN THIS AREA

19 The diagram shows a prism with a cross section in the shape of a trapezium.

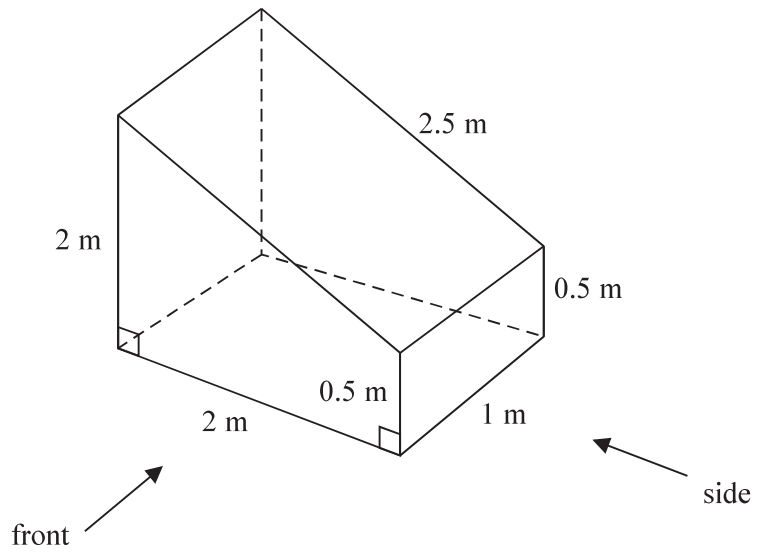

On the centimetre grid below, draw the front elevation and the side elevation of the prism.
Use a scale of 2 cm to 1 m.

(Total for Question 19 is 4 marks)

DO NOT WRITE IN THIS AREA
DO NOT WRITE IN THIS AREA
DO NOT WRITE IN THIS AREA

20 Olly drove 56 km from Liverpool to Manchester.
He then drove 61 km from Manchester to Sheffield.

Olly's average speed from Liverpool to Manchester was 70 km/h.
Olly took 75 minutes to drive from Manchester to Sheffield.

(a) Work out Olly's average speed for his total drive from Liverpool to Sheffield.

..... km/h

(4)

Janie drove from Barnsley to York.

Janie's average speed from Barnsley to Leeds was 80 km/h.
Her average speed from Leeds to York was 60 km/h.

Janie says that the average speed from Barnsley to York can be found by working out the mean of 80 km/h and 60 km/h.

(b) If Janie is correct, what does this tell you about the two parts of Janie's journey?

.....

.....

(1)

(Total for Question 20 is 5 marks)

DO NOT WRITE IN THIS AREA
DO NOT WRITE IN THIS AREA
DO NOT WRITE IN THIS AREA

21

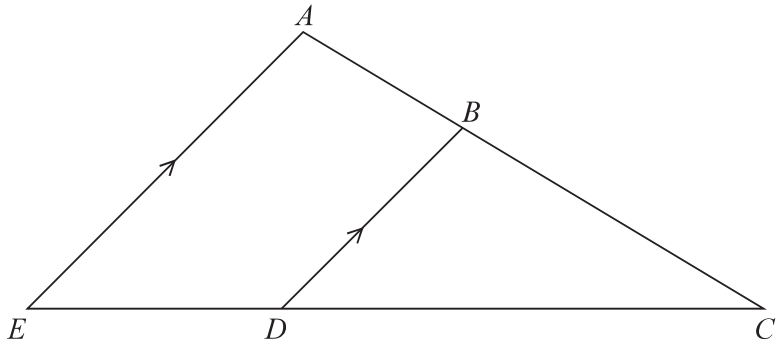

ABC and *EDC* are straight lines.
EA is parallel to *DB*.

EC = 8.1 cm.
DC = 5.4 cm.
DB = 2.6 cm.

(a) Work out the length of *AE*.

..... cm
(2)

AC = 6.15 cm.

(b) Work out the length of *AB*.

..... cm
(2)

(Total for Question 21 is 4 marks)

DO NOT WRITE IN THIS AREA
DO NOT WRITE IN THIS AREA
DO NOT WRITE IN THIS AREA

22 Anil wants to invest £25 000 for 3 years in a bank.

Personal Bank	**Secure Bank**
Compound Interest	Compound Interest
2% for each year	4.3% for the first year 0.9% for each extra year

Which bank will give Anil the most interest at the end of 3 years?
You must show all your working.

(Total for Question 22 is 3 marks)

23 A number, n, is rounded to 2 decimal places.
The result is 4.76

Using inequalities, write down the error interval for n.

.....

(Total for Question 23 is 2 marks)

DO NOT WRITE IN THIS AREA
DO NOT WRITE IN THIS AREA
DO NOT WRITE IN THIS AREA

24 Solve $x^2 + 5x - 24 = 0$

.....

(Total for Question 24 is 3 marks)

DO NOT WRITE IN THIS AREA

DO NOT WRITE IN THIS AREA

DO NOT WRITE IN THIS AREA

25 Here are the first six terms of an arithmetic sequence.

3 8 13 18 23 28

(a) Find an expression, in terms of n, for the nth term of this sequence.

.....

(2)

The nth term of a different sequence is $3n^2$
Nathan says that the 4th term of this sequence is 144

(b) Is Nathan right?
Show how you get your answer.

(1)

(Total for Question 25 is 3 marks)

TOTAL FOR PAPER IS 80 MARKS

DO NOT WRITE IN THIS AREA
DO NOT WRITE IN THIS AREA
DO NOT WRITE IN THIS AREA

BLANK PAGE

DO NOT WRITE IN THIS AREA
DO NOT WRITE IN THIS AREA
DO NOT WRITE IN THIS AREA