1 A cylinder has a radius of 5 cm and a height of 12 cm.

Work out the volume of the cylinder.
Give your answer in terms of π.

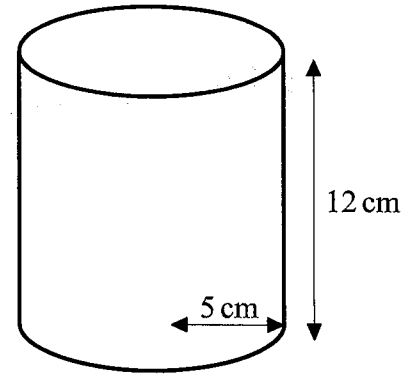

volume $= \pi r^2 \times h$

$= \pi (5)^2 \times 12$

$= 300\pi \text{ cm}^3$

300π cm^3

(Total for Question 1 is 3 marks)

---

2 A cylinder has a diameter of 9 cm and a height of 11 cm.

Work out the volume of the cylinder.
Give your answer correct to 1 decimal place.

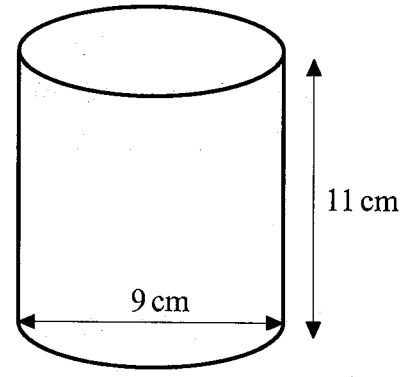

RADIUS = 4.5 cm

volume $= \pi r^2 \times h$

$= \pi (4.5)^2 \times 11$

$= 699.8 \text{ cm}^3$

699.8 cm^3

(Total for Question 2 is 3 marks)

3 A solid cylinder has a radius of 4 cm and a height of 10.5 cm.

Work out the total surface area of the cylinder.
Give your answer correct to 1 decimal place.

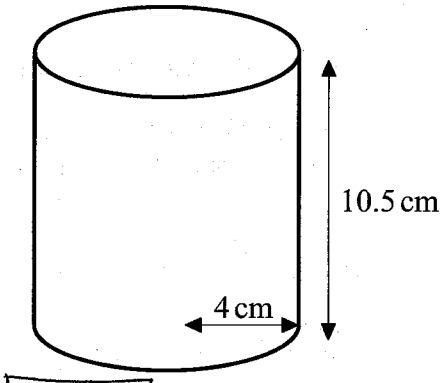

Surface Area = 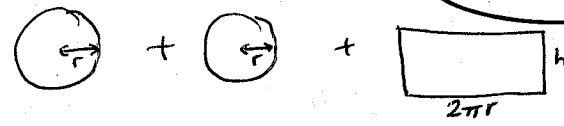

$= 2 \times \pi r^2 + 2\pi r h$

$= 2\pi(4)^2 + 2\pi(4)(10.5)$

$= 364.4 \text{ cm}^2$

364.4 cm²

(Total for Question 3 is 3 marks)

---

4 A solid cylinder has a diameter of 7 cm and a height of 15 cm.

Work out the total surface area of the cylinder.
Give your answer correct to 3 significant figures.

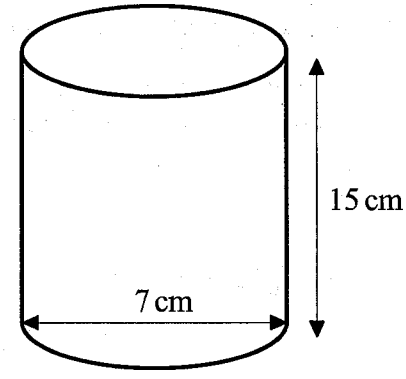

Total s.a. $= 2\pi r^2 + 2\pi r h$

$= 2\pi(3.5)^2 + 2\pi(3.5)(15)$ RADIUS = 3.5cm

$= 407 \text{ cm}^2$

407 cm²

(Total for Question 4 is 3 marks)

5 A solid cylinder has a radius of 6 m and a height of 7 m.

Work out the total surface area of the cylinder.
Give your answer in terms of π.

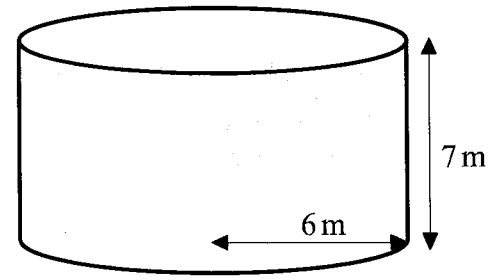

$$\text{Total s.a} = 2\pi r^2 + 2\pi r h$$
$$= 2\pi(6)^2 + 2\pi(6)(7)$$
$$= 156\pi$$

156π m^2

(Total for Question 5 is 4 marks)

---

6 A solid cylinder has a radius of 14cm and a height of 25cm.

Work out the volume of the cylinder.
Give your answer correct to 3 significant figures.

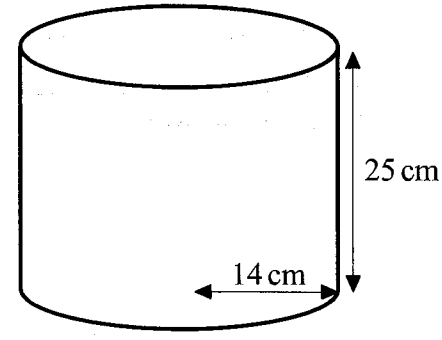

$$\text{Volume} = \pi r^2 h$$
$$= \pi(14)^2(25)$$
$$= 15400 \text{ cm}^3$$

15400 cm^3

(Total for Question 6 is 4 marks)

7 A solid cylinder is cut in half to form a semi-cylinder with a radius of 20 cm and a length of 75 cm.

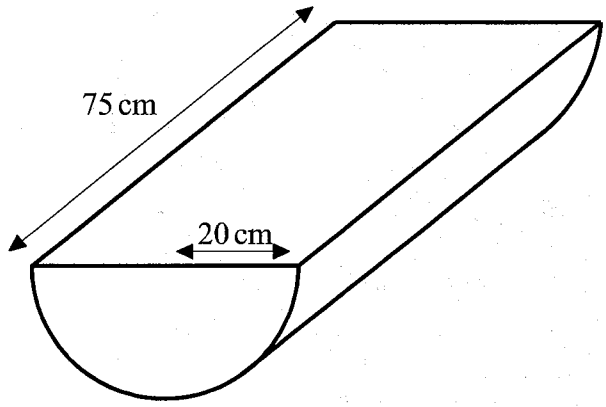

(a) Work out the volume of the semi-cylinder.
Give your answer correct to 3 significant figures.

$$\text{volume} = \frac{\pi r^2}{2} \times h$$

$$= \frac{\pi (20)^2}{2} \times 75$$

$$= 47100 \text{ cm}^3$$

47100 cm³

(3)

(b) Work out the total surface are of the of the semi-cylinder.
Give your answer correct to 3 significant figures.

Total surface area = +

2 semi circles | top rectangle | curved rectangle

$$= \pi (20)^2 + 40 \times 75 + \frac{\cancel{2}\pi \overset{(20)}{r}}{\cancel{2}} \times 75$$

$$= 8970 \text{ cm}^2$$

8970 cm²

(3)

(Total for Question 7 is 6 marks)

8 A solid is formed by placing a half cylinder on a rectangular prism.
The solid has a width of 2 m, a total height of 3 m and a length of 8 m.

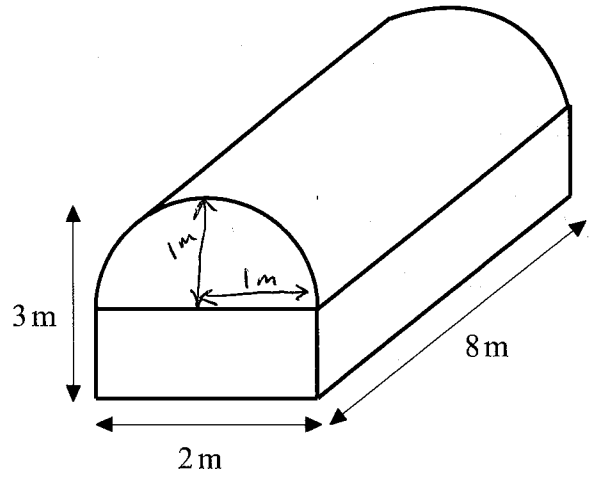

Work out the volume of the solid.
Give your answer correct to 3 significant figures.

RADIUS = 1m

volume of half cylinder $= \frac{\pi r^2}{2} \times h$

$= \frac{\pi (1)^2}{2} \times 8 \quad = 4\pi$

volume of prism $= 2 \times 2 \times 8$

$= 32 \ m^3$

total volume $= 4\pi + 32$

$= 44.6 \ m^3$

44.6 cm³

(Total for Question 8 is 4 marks)

9 A solid cylinder has a radius of r m and a height of 12 m.

The volume of the cylinder is 507π ~~ϕ~~ m^3.
Find the value of r.

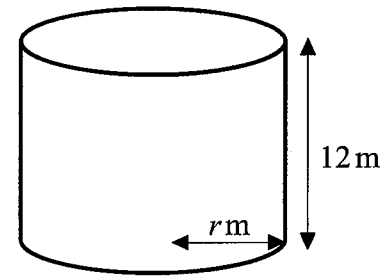

volume $= \pi r^2 h$

$507\cancel{\pi} = \cancel{\pi} r^2 (12)$

$507 = r^2 (12)$

$r^2 = \frac{507}{12}$

$r = \sqrt{\frac{507}{12}}$

$= 6.5$ m

$r =$ 6.5

(Total for Question 9 is 4 marks)

---

10 A solid cylinder has a radius of 5 m and a height of h m.

The total surface area of the cylinder is 165π ~~ϕ~~ m^2.
Find the value of h.

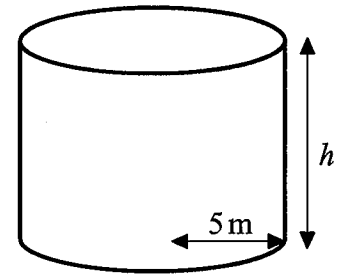

surface area $= 2\pi r^2 + 2\pi r h$

$165\pi = 2\pi(5)^2 + 2\pi(5)(h)$

$165\pi = 50\pi + 10\pi h$

$-50\pi \quad -50\pi$

$115\cancel{\pi} = 10\cancel{\pi} h$

$115 = 10h$

$h = 11.5$ m

$h =$ 11.5

(Total for Question 10 is 4 marks)

11 The diagram shows a cylindrical tank.
The tank has a top and a bottom.

5 of these tanks are going to be painted.
Each tank has a diameter of 40 cm and a height of 1.8 m.

Each pot of paint can cover 4 m².

How many pots of paint are needed to paint the 5 tanks?

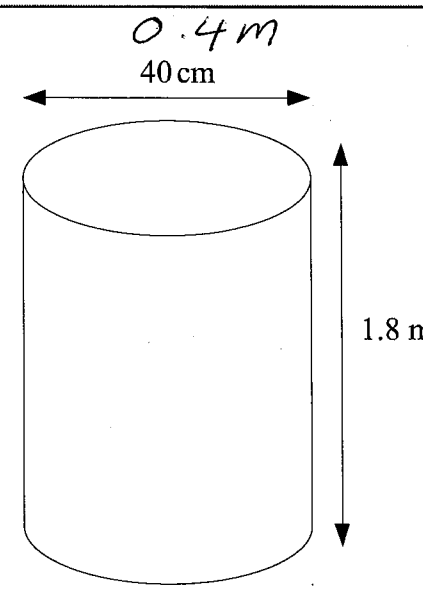

surface area $= 2\pi r^2 + 2\pi r h$

$= 2\pi(0.2)^2 + 2\pi(0.2)(1.8)$

$= 2.513 \quad m^2$

Total area of 5 tanks $= 5 \times$ "2.513"

$= 12.566 \quad m^2$

$\frac{12.566}{4} = 3.14$

= 4 pots of paint

.....4.....pots

(Total for Question 11 is 4 marks)