1 The diagram shows a cone.

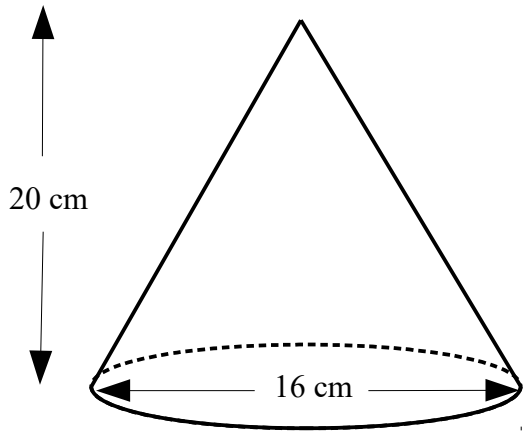

Volume of cone $= \frac{1}{3}\pi r^2 h$

Curved surface area of cone $= \pi r l$

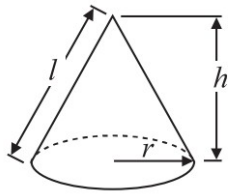

The height of the cone is 20 cm.
The base of the cone has a diameter of 16 cm.

Work out the volume of the cone.
Give your answer correct to 3 significant figures.

..... cm^3

(Total for Question 1 is 2 marks)

2 The diagram shows a solid hemisphere with a radius of 10 cm.

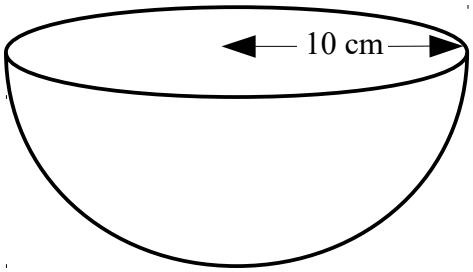

Volume of sphere = $\frac{4}{3}\pi r^3$

Surface area of sphere = $4\pi r^2$

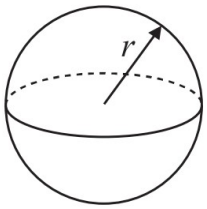

Work out the total surface area of the hemisphere.
Give your answer in terms of π.

..... cm^2

(Total for Question 2 is 3 marks)

3 The diagram shows a solid cone.

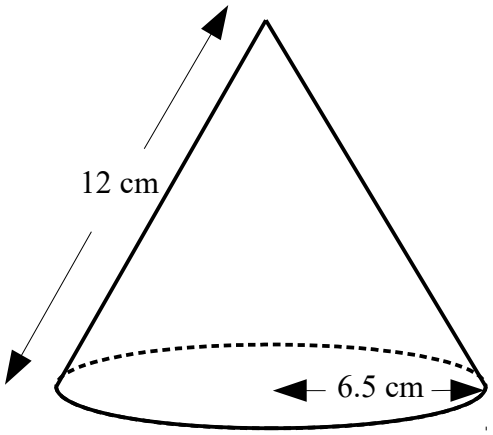

Volume of cone = $\frac{1}{3}\pi r^2 h$

Curved surface area of cone = $\pi r l$

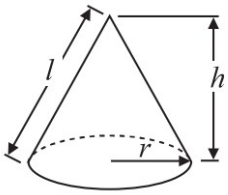

The slanted height of the cone is 12 cm.
The base of the cone has a radius of 6.5 cm.

Work out the total surface area of the cone.
Give your correct to 3 significant figures.

..... cm^2

(Total for Question 3 is 3 marks)

4 The diagram shows a solid shape.
The shape is a cone on top of a hemisphere.

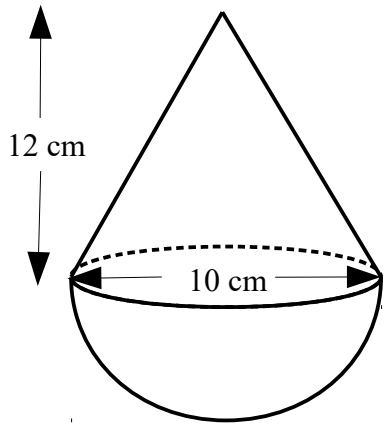

Volume of a cone = $\frac{1}{3}\pi r^2 h$

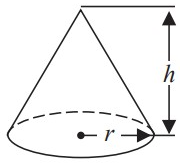

Volume of a sphere = $\frac{4}{3}\pi r^3$

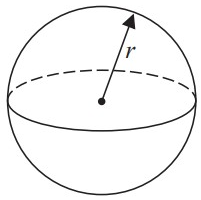

The height of the cone is 12 cm.
The base of the cone has a diameter of 10 cm.
The diameter of the hemisphere is 10 cm.

Work out the total volume of the solid shape.
Give your answer in terms of π.

..... cm^3

(Total for Question 4 is 4 marks)

5 The diagram shows a sphere and a cube.

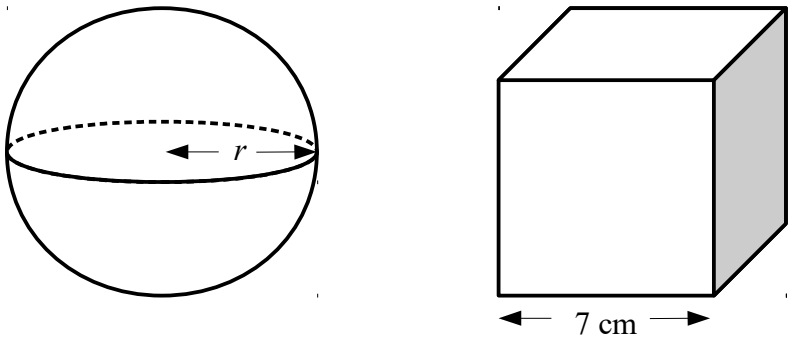

The cube has length 7 cm.

The sphere and the cube have the same volume.
Work out the radius of the sphere.

Give your answer correct to 3 significant figures.

Volume of sphere = $\frac{4}{3}\pi r^3$

Surface area of sphere = $4\pi r^2$

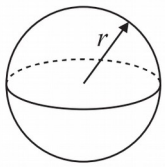

..... cm

(Total for Question 5 is 3 marks)

6 The diagram shows a solid cone.

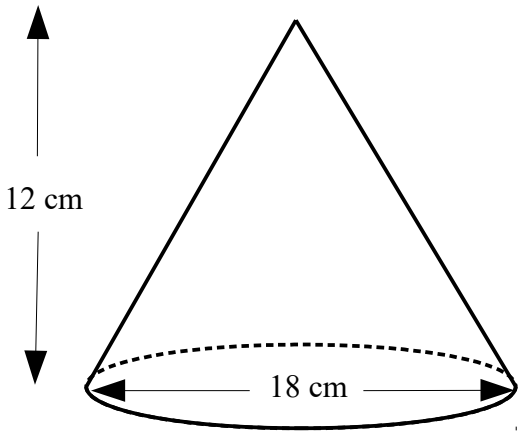

Volume of cone $= \frac{1}{3}\pi r^2 h$

Curved surface area of cone $= \pi r l$

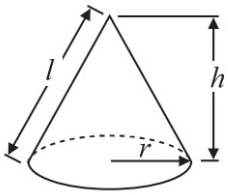

The height of the cone is 12 cm.
The base of the cone has a diameter of 18 cm.

Work out the total surface area of the cone.
Give your answer in terms of π.

....

(Total for Question 6 is 4 marks)

7

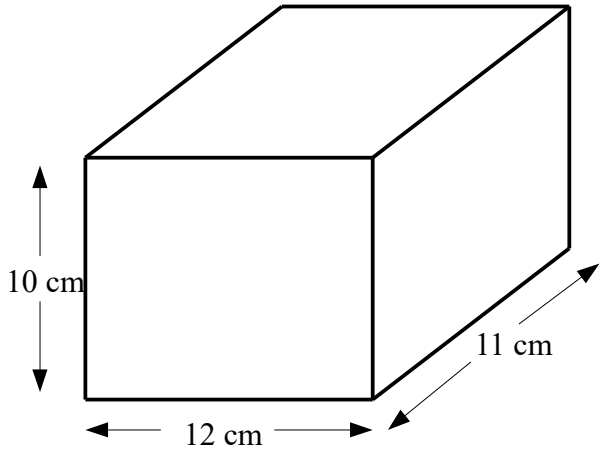

A rectangular container is 12 cm long, 11 cm wide and 10 cm high.
The container is filled with water to a depth of 8 cm.

A metal sphere of radius 3.5 cm is placed in the water.
It sinks to the bottom.

Calculate the rise in the water level.
Give your answer correct to 3 significant figures

Volume of sphere = $\frac{4}{3}\pi r^3$

Surface area of sphere = $4\pi r^2$

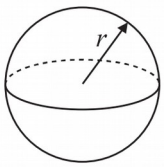

..... cm

(Total for Question 7 is 4 marks)