1 The diagram shows a cone.

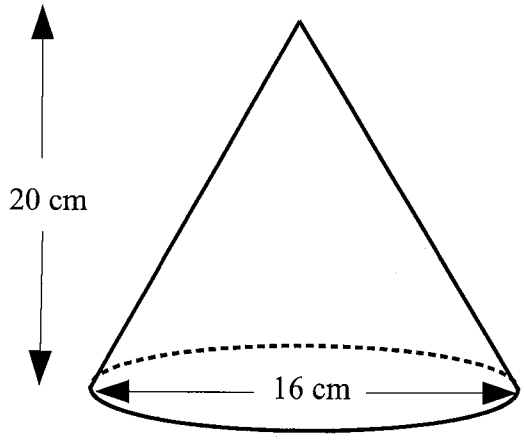

Volume of cone $= \frac{1}{3}\pi r^2 h$

Curved surface area of cone $= \pi r l$

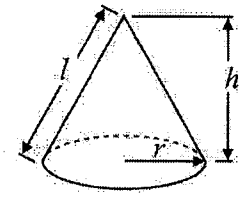

The height of the cone is 20 cm.
The base of the cone has a diameter of 16 cm. $r = 8$ cm

Work out the volume of the cone.
Give your answer correct to 3 significant figures.

$$\text{volume} = \frac{1}{3}\pi r^2 h$$

$$= \frac{1}{3}\pi (8)^2 (20)$$

$$= 1340 \text{ cm}^3$$

1340 cm^3

(Total for Question 1 is 2 marks)

2 The diagram shows a solid hemisphere with a radius of 10 cm.

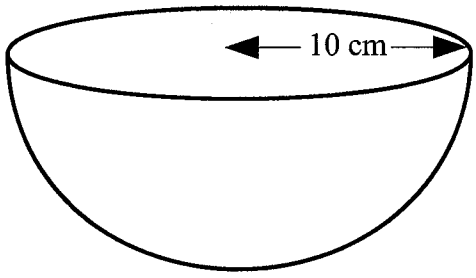

Volume of sphere $= \frac{4}{3}\pi r^3$

Surface area of sphere $= 4\pi r^2$

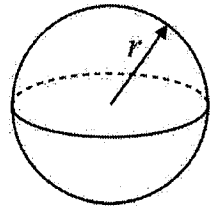

Work out the total surface area of the hemisphere.
Give your answer in terms of π.

Area of circle $= \pi(10)^2$

$= 100\pi$

Curved area $= \frac{4\pi(10)^2}{2}$

$= 200\pi$

$100\pi + 200\pi = 300\pi$

300π cm^2

(Total for Question 2 is 3 marks)

3 The diagram shows a solid cone.

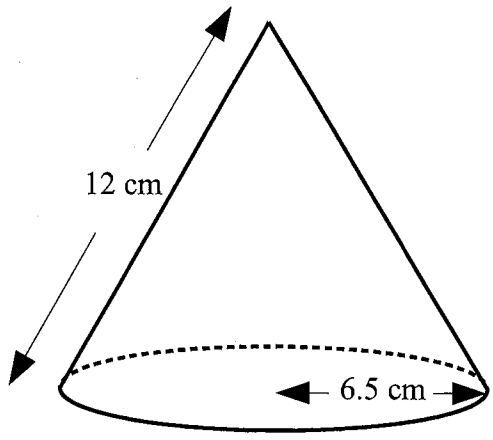

Volume of cone $= \frac{1}{3}\pi r^2 h$

Curved surface area of cone $= \pi r l$

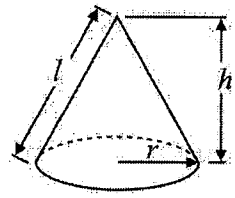

The slanted height of the cone is 12 cm.
The base of the cone has a radius of 6.5 cm.

Work out the total surface area of the cone.
Give your correct to 3 significant figures.

Curved surface area $= \pi(6.5)(12)$

$= 78\pi$

area of circle $= \pi(6.5)^2$

$= \frac{169}{4}\pi$

$78\pi + \frac{169}{4}\pi = 378 \text{ cm}^2$

378 cm^2

(Total for Question 3 is 3 marks)

4 The diagram shows a solid shape.
The shape is a cone on top of a hemisphere.

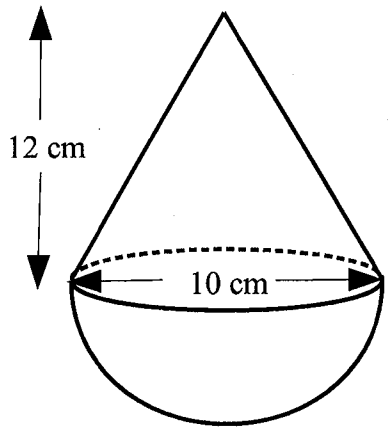

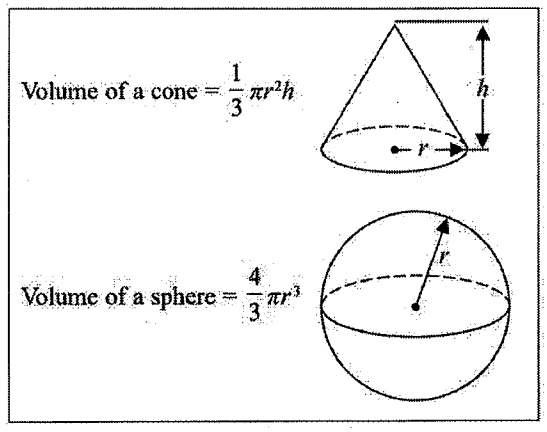

The height of the cone is 12 cm.
The base of the cone has a diameter of 10 cm. $r = 5$
The diameter of the hemisphere is 10 cm.

Work out the total volume of the solid shape.
Give your answer in terms of π.

volume of cone $= \frac{1}{3}\pi(5)^2(12)$

$= 100\pi$

volume of hemisphere $= \frac{2}{3}\pi(5)^3$

$= \frac{250}{3}\pi$

total volume $= 100\pi + \frac{250}{3}\pi$

$= \frac{550}{3}\pi$

$\frac{550}{3}\pi$ cm^3

(Total for Question 4 is 4 marks)

5 The diagram shows a sphere and a cube.

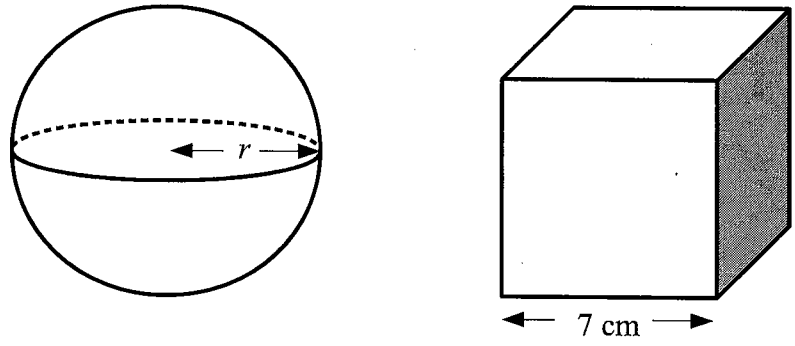

The cube has length 7 cm.

The sphere and the cube have the same volume.
Work out the radius of the sphere.

Give your answer correct to 3 significant figures.

Volume of sphere $= \frac{4}{3}\pi r^3$

Surface area of sphere $= 4\pi r^2$

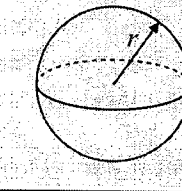

volume of cube $= 7 \times 7 \times 7$

$= 343 \text{ cm}^3$

$\frac{4}{3}\pi r^3 = 343$

$4\pi r^3 = 1029$

$r^3 = \frac{1029}{4\pi}$

$r^3 = 81.885...$

$r = \sqrt[3]{81.885}$

$= 4.34 \text{ cm}$

4.34 cm

(Total for Question 5 is 3 marks)

6 The diagram shows a cone.

solid

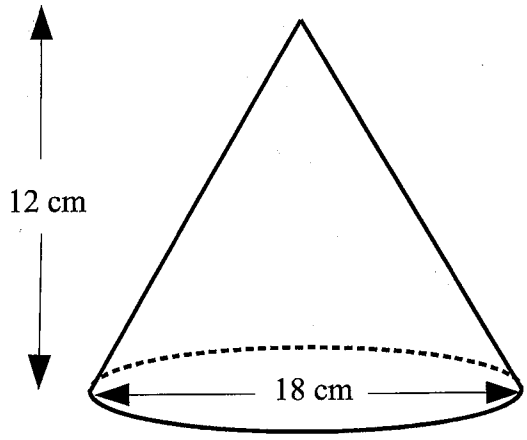

Volume of cone $= \frac{1}{3}\pi r^2 h$

Curved surface area of cone $= \pi r l$

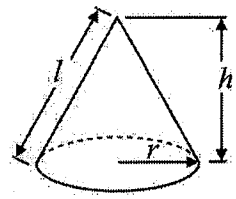

The height of the cone is 12 cm.
The base of the cone has a diameter of 18 cm.

$r = 9\text{cm}$

Work out the total surface area of the cone.
Give your answer in terms of π.

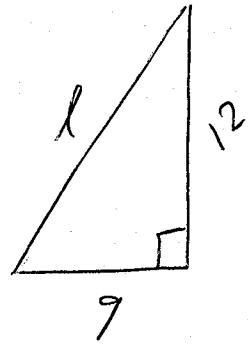

$l^2 = 9^2 + 12^2$

$l^2 = 225$

$l = \sqrt{225}$

$= 15\text{cm}$

Area of circle $= \pi(9)^2$

$= 81\pi$

Curved area $= \pi(9)(15)$

$= 135\pi$

Total surface area $= 81\pi + 135\pi$

$= 216\pi$

$216\pi \text{ cm}^2$

(Total for Question 6 is 4 marks)

7

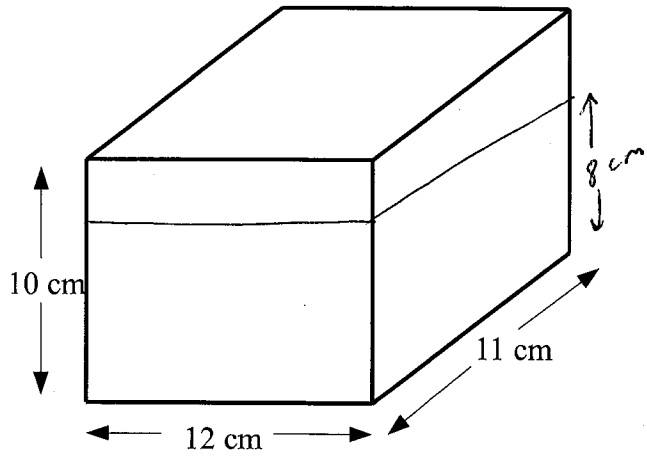

A rectangular container is 12 cm long, 11 cm wide and 10 cm high.
The container is filled with water to a depth of 8 cm.

A metal sphere of radius 3.5 cm is placed in the water.
It sinks to the bottom.

Calculate the rise in the water level.
Give your answer correct to 3 significant figures

Volume of sphere $= \frac{4}{3}\pi r^3$

Surface area of sphere $= 4\pi r^2$

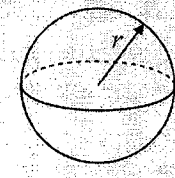

volume of sphere $= \frac{4}{3}\pi(3.5)^3$

$= \frac{343}{6}\pi \text{ cm}^3$

volume of water $= 12 \times 11 \times 8$

$= 1056 \text{ cm}^3$

Total volume $= 1235.59 \text{ cm}^3$

$12 \times 11 \times h = 1235.59$

$h = \frac{1235.59}{12 \times 11}$

$= 9.36 \text{ cm}$

$9.36 - 8$

$= 1.36 \text{ cm}$

1.36 cm

(Total for Question 7 is 4 marks)