1 $\frac{a}{\sin A} = \frac{b}{\sin B}$

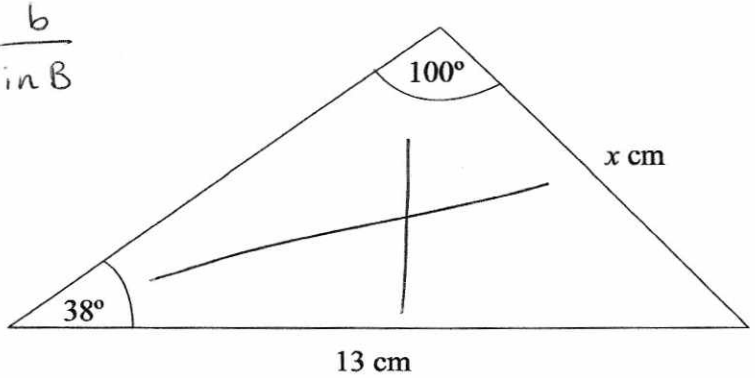

Work out the value of x.
Give your answer to 1 decimal place.

$$\frac{x}{\sin(38)} = \frac{13}{\sin(100)}$$

$$x = \frac{13}{\sin(100)} \times \sin(38)$$

$$= 8.1 \text{ (1dp)}$$

8.1

(Total for question 1 is 3 marks)

2

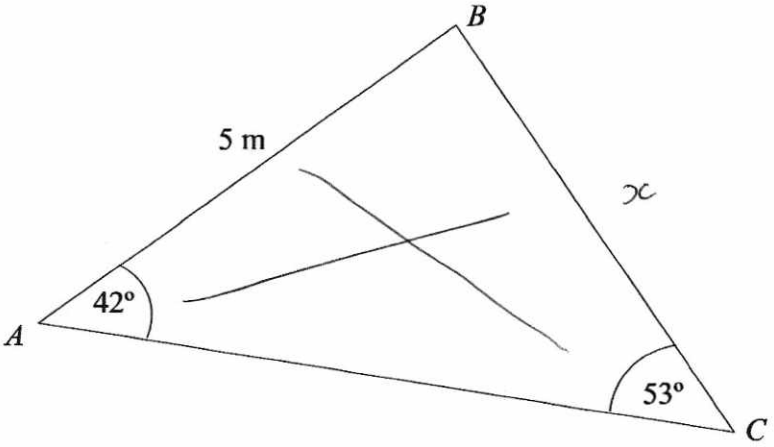

Work out the length of BC.
Give your answer to 3 significant figures.

$$\frac{x}{\sin(42)} = \frac{5}{\sin(53)}$$

$$x = \frac{5}{\sin(53)} \times \sin(42)$$

$$= 4.19 \text{ (3sf)}$$

4.19 m

(Total for question 2 is 3 marks)

3

$$\frac{\sin A}{a} = \frac{\sin B}{b}$$

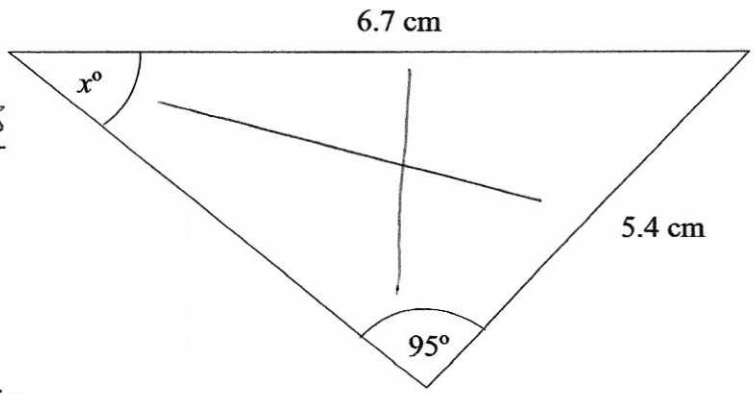

Work out the value of x.
Give your answer to 3 significant figures.

$$\frac{\sin x}{5.4} = \frac{\sin(95)}{6.7}$$

$$\sin x = \frac{\sin(95)}{6.7} \times 5.4$$

$$= 0.8029\ldots$$

$$x = \sin^{-1}(\text{Ans})$$

$$= 53.4 \ (3sf)$$

53.4

(Total for question 3 is 3 marks)

4

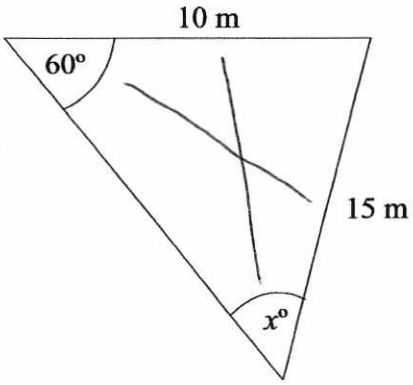

Work out the size of angle x.
Give your answer to 3 significant figures.

$$\frac{\sin x}{10} = \frac{\sin 60}{15}$$

$$\sin x = \frac{\sin(60)}{15} \times 10$$

$$\sin x = \frac{\sqrt{3}}{3}$$

$$x = \sin^{-1}(\text{Ans})$$

$$= 35.3 \ (3sf)$$

35.3

(Total for question 4 is 3 marks)

5

$180 - 55 - 20 = 105$

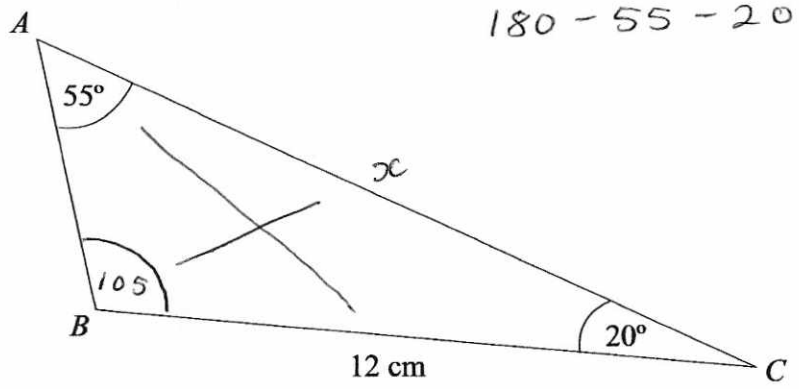

Work out the length of AC.
Give your answer to 1 decimal place.

$$\frac{x}{\sin(105)} = \frac{12}{\sin(55)}$$

$$x = \frac{12}{\sin(55)} \times \sin(105)$$

$$= 14.2 \text{ (1dp)}$$

14.2 cm

(Total for question 5 is 3 marks)

6

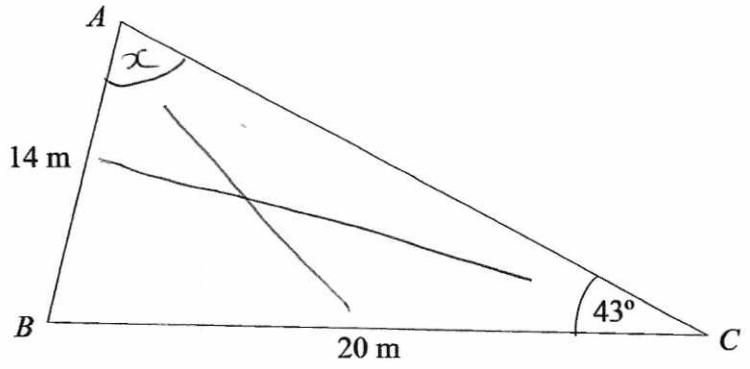

Work out the size of angle *BAC*.
Give your answer to 3 significant figures.

$$\frac{\sin x}{20} = \frac{\sin(43)}{14}$$

$$\sin x = \frac{\sin(43)}{14} \times 20$$

$$\sin x = 0.97428\ldots$$

$$x = \sin^{-1}(\text{Ans})$$

$$= 77.0 \text{ (3sf)}$$

77.0 °

(Total for question 6 is 3 marks)

7

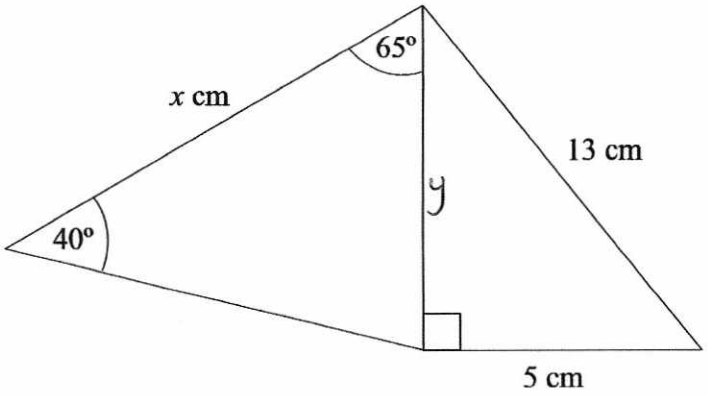

Work out the value of x.
Give your answer to 1 decimal place.

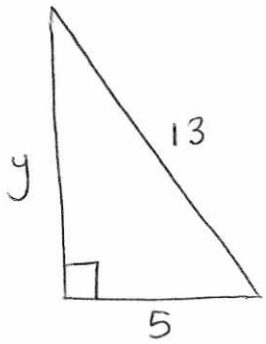

$y^2 + 5^2 = 13^2$

$y^2 = 13^2 - 5^2$

$y^2 = 144$

$y = 12$

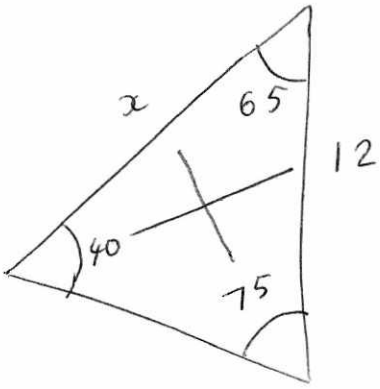

$180 - 65 - 40 = 75$

$\frac{x}{\sin(75)} = \frac{12}{\sin(40)}$

$x = \frac{12}{\sin(40)} \times \sin(75)$

$= 18.0$ (1dp)

18.0

(Total for question 7 is 5 marks)

8

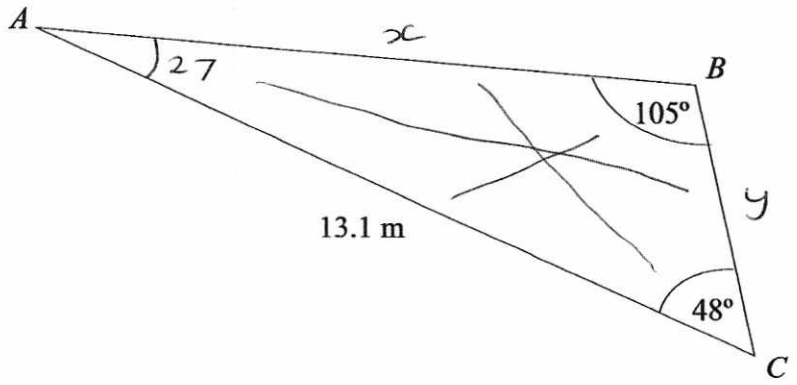

Work out the perimeter of triangle *ABC*.
Give your answer to 3 significant figures.

$180 - 105 - 48 = 27$

$$\frac{x}{\sin(48)} = \frac{13.1}{\sin(105)}$$

$$x = \frac{13.1}{\sin(105)} \times \sin(48)$$

$$= 10.07861779$$

$$\frac{y}{\sin(27)} = \frac{13.1}{\sin(105)}$$

$$y = \frac{13.1}{\sin(105)} \times \sin(27)$$

$$= 6.157072712$$

$x + y + 13.1 = 29.3\text{m}$ (3sf)

29.3 m

(Total for question 8 is 4 marks)

9

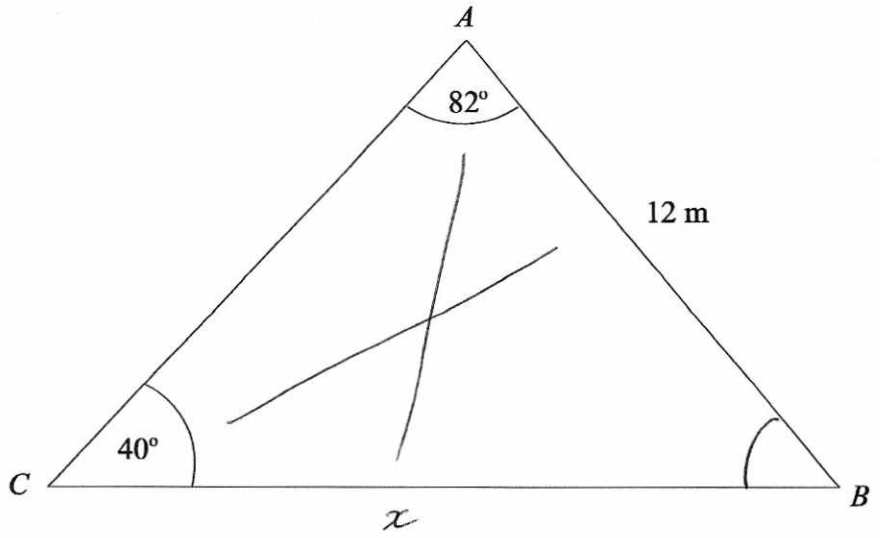

Work out the area of triangle *ABC*

Give your answer to 1 decimal place.

$$\frac{x}{\sin(82)} = \frac{12}{\sin(40)}$$

$$x = \frac{12}{\sin(40)} \times \sin(82)$$

$$x = 18.487\ldots$$

Angle ABC $= 180 - 82 - 40$

$= 58$

Area $= \frac{1}{2}(18.487\ldots)(12)\sin(58)$

$= \underline{\underline{94.1\ m^2}}$ 1dp

94.1 m^2

(Total for question 9 is 5 marks)

10

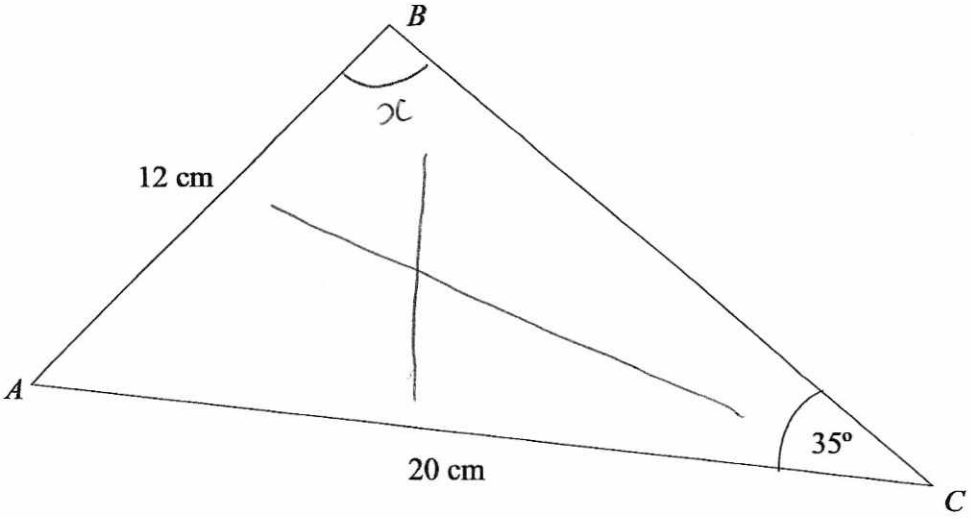

Angle *ABC* is obtuse.
Work out the size of angle *ABC*.
Give your answer to 3 significant figures.

$$\frac{\sin x}{20} = \frac{\sin(35)}{12}$$

$$\sin(x) = \frac{\sin(35)}{12} \times 20$$

$$\sin(x) = 0.95596\ldots$$

$$x = \sin^{-1}(\text{Ans})$$

$$= 72.9$$

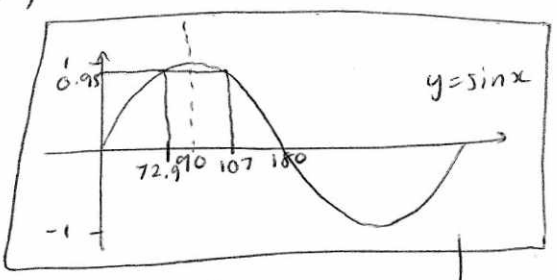

But ABC is obtuse...

$$180 - 72.9 = \underline{\underline{107}} \quad (3sf)$$

The sine graph is symmetrical about 90°

107 °

(Total for question 10 is 4 marks)