1 The average daytime temperature for 10 days is recorded.
A shop also records its ice cream sales for each of the 10 days.

The scatter graph shows this information.

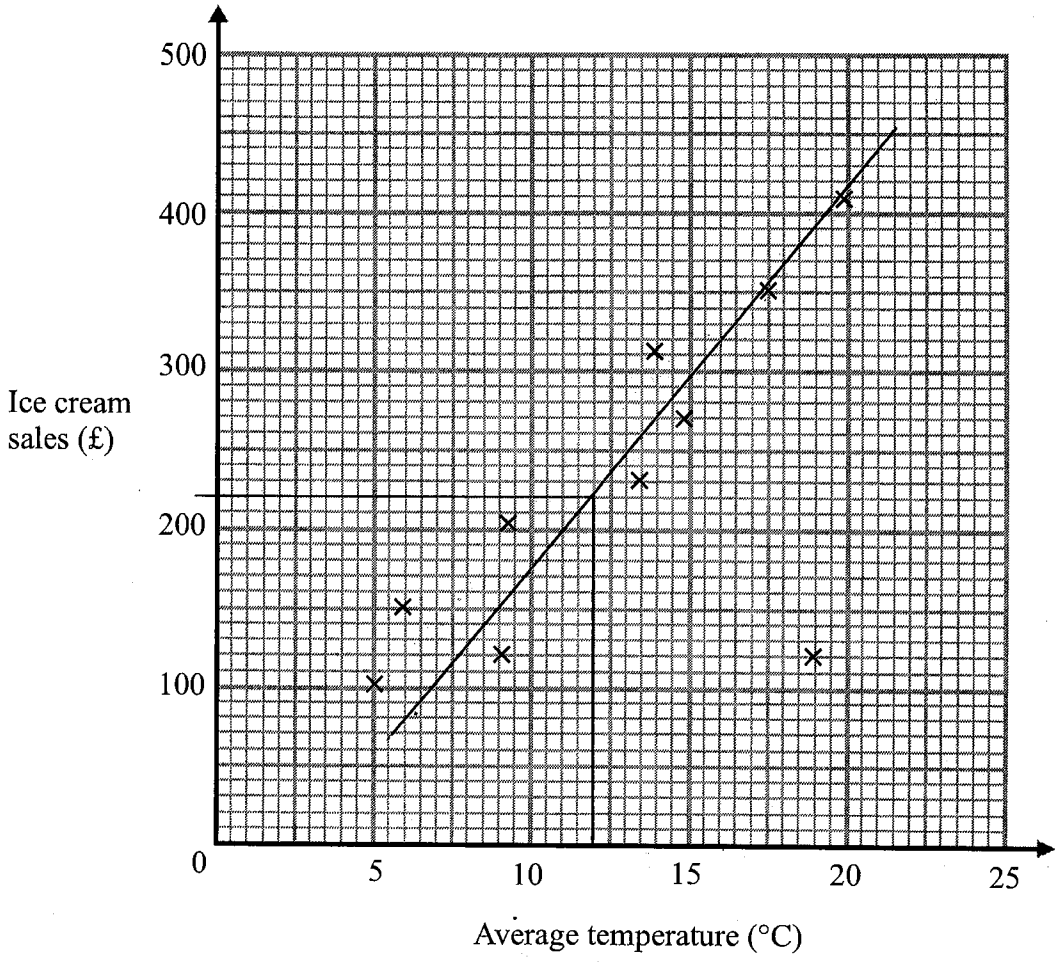

(a) What type of correlation does the scatter graph show?

positive
(1)

(b) One of the points is an outlier. Write down the coordinates for this point.

(19), (120)
(1)

(c) On another day the temperature was 12°.
Estimate the ice cream sales on this day.

£ 220
[200 – 240] (2)

(Total for Question 1 is 4 marks)

2 Two buses, bus A and bus B, both use the same bus stop.

Bus A runs every 12 minutes.
Bus B runs every 14 minutes.

Both buses are at the bus stop at 10 am.

What time will both buses next both be at the bus stop.

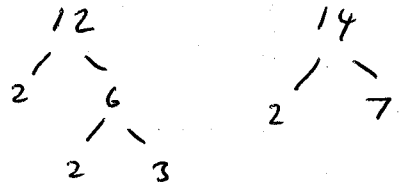

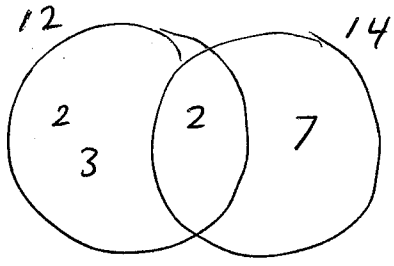

10 am
60 mins
11am
24 mins
11:24 am

LCM = 12 × 7 = 84
after 84 mins

11:24 am

(Total for Question 2 is 3 marks)

---

3 A number y is rounded to 2 decimal places.

The result is 7.74

Write down the error interval for y.

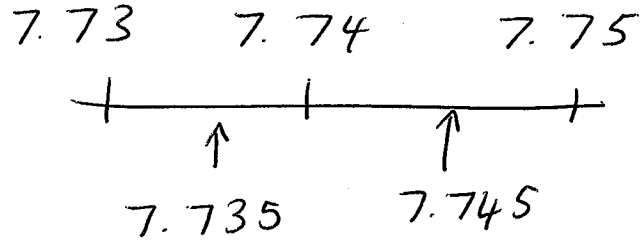

7.735 $\leq y <$ 7.745

(Total for Question 3 is 2 marks)

4 The diagram shows the plan, front elevation and side elevation of a solid shape, drawn on a centimetre grid.

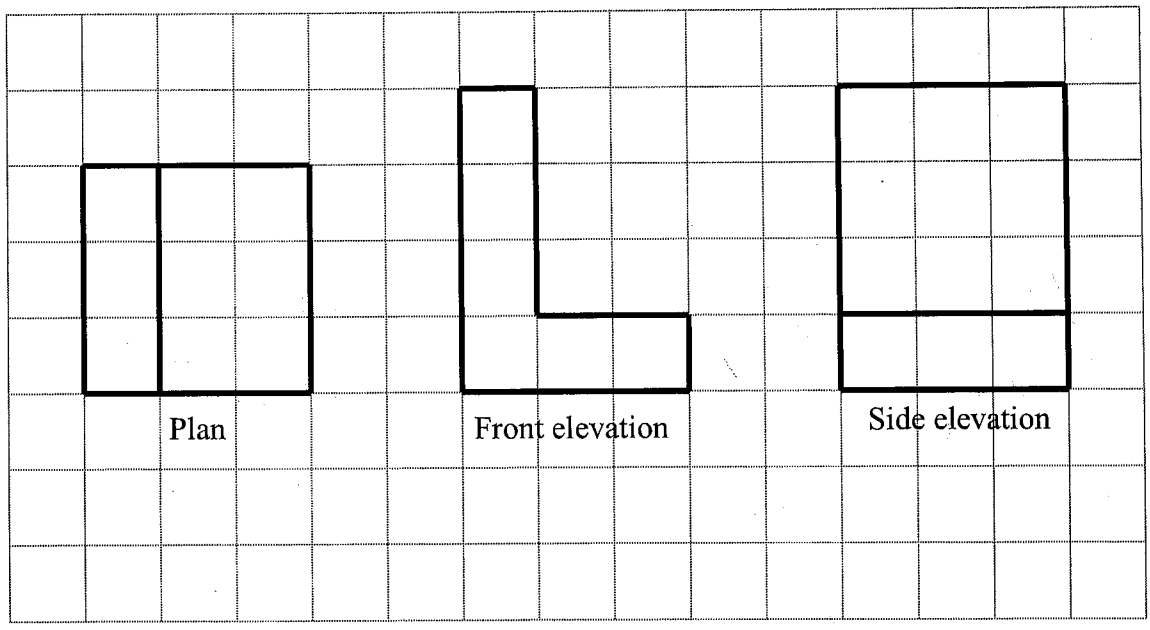

In the space below, draw a sketch of the solid shape.
Give the dimensions of the solid on your sketch.

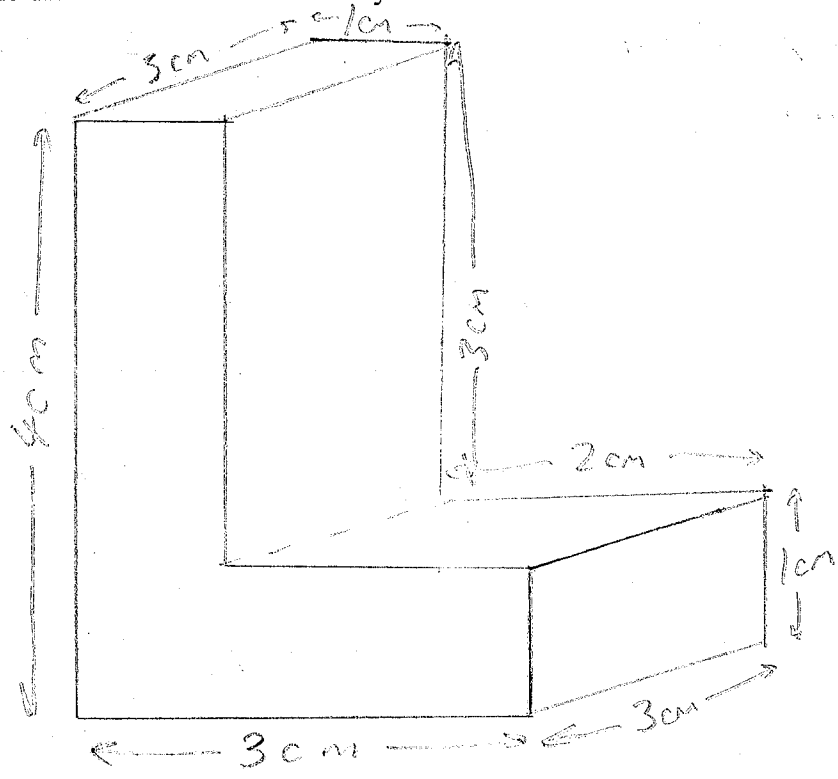

(Total for Question 4 is 2 marks)

5

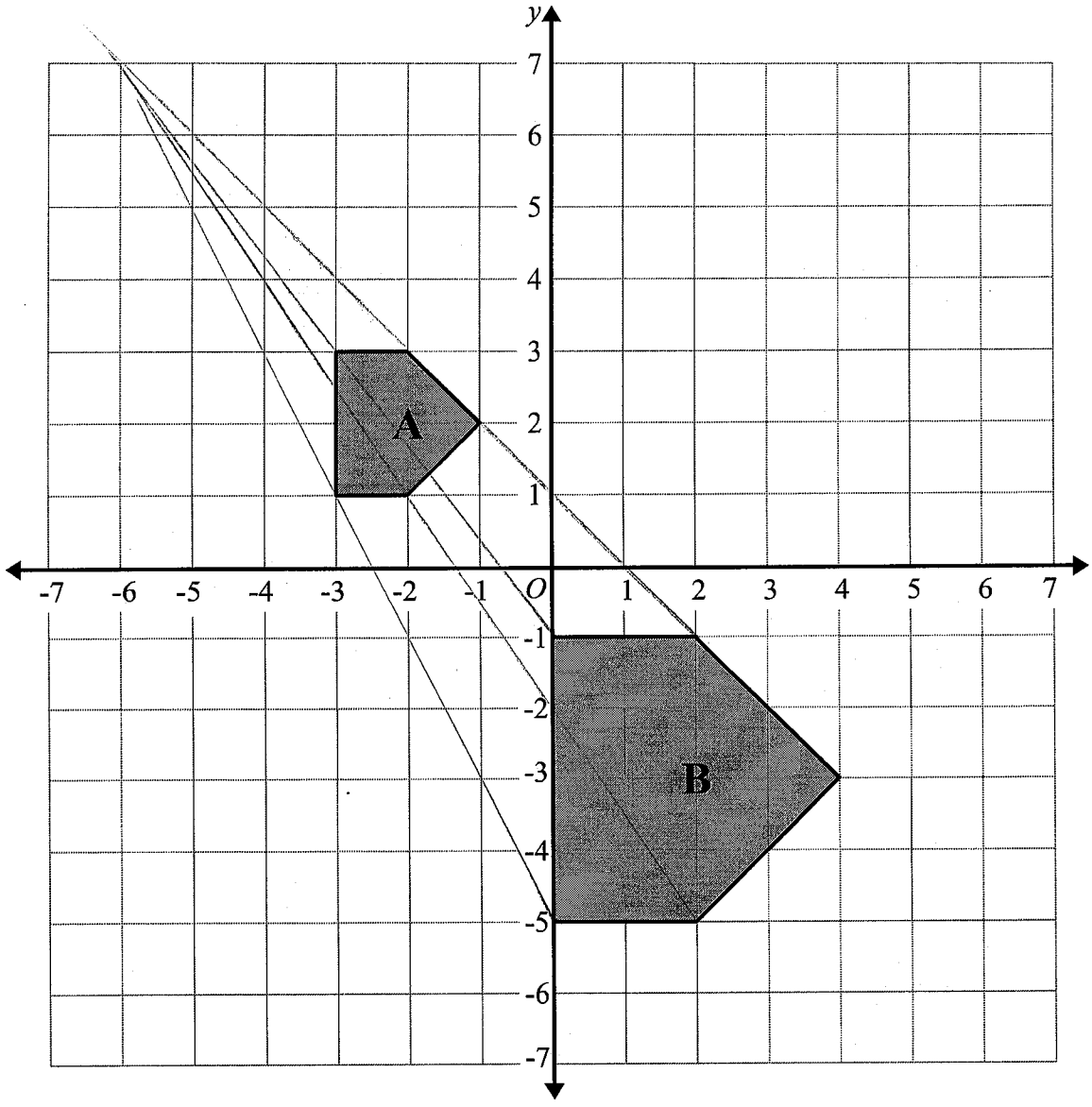

Describe fully the single transformation that maps shape **A** onto shape **B**.

Enlargement, Scale Factor 2,
centre (-6, 7)

(Total for Question 5 is 2 marks)

6

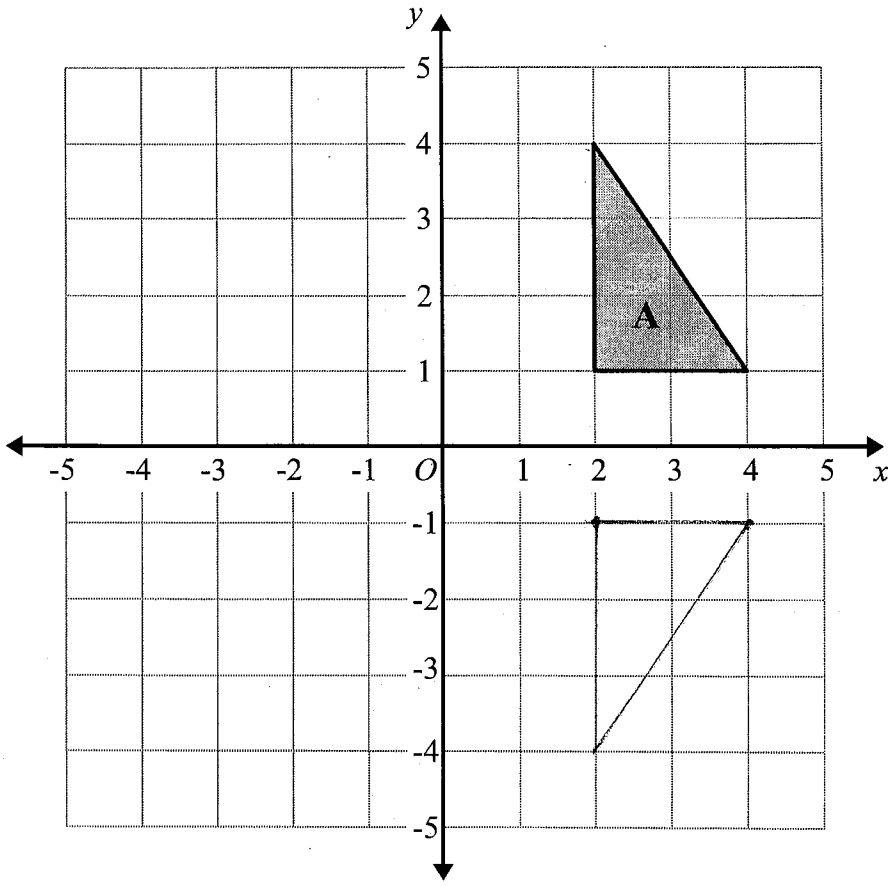

Reflect triangle **A** in the x-axis.

(Total for Question 6 is 2 marks)

---

7 (a) Write down the value of 2^{-3}

$\frac{1}{2^3}$

$\frac{1}{8}$

(1)

(b) Write down the value of 2^0

1

(1)

(Total for Question 7 is 2 marks)

8 Work out an estimate for the value of $\dfrac{9.25 \times 21.3}{0.47}$

$$\frac{9 \times 20}{0.5} = \frac{180}{0.5} = 360$$

360

(Total for Question 8 is 3 marks)

---

9 $y^2 \times y^a = y^7$

(a) Find the value of a.

$2 + a = 7$

$a = 5$

(1)

$(y^4)^b = y^{12}$

(b) Find the value of b.

$4b = 12$

$b = 3$

(1)

(Total for Question 9 is 2 marks)

---

10 (a) Expand $4(3x - 8)$

$12x - 32$

(1)

(b) Factorise fully $21y + 7y^2$

$7y(3 + y)$

(2)

(Total for Question 10 is 3 marks)