1

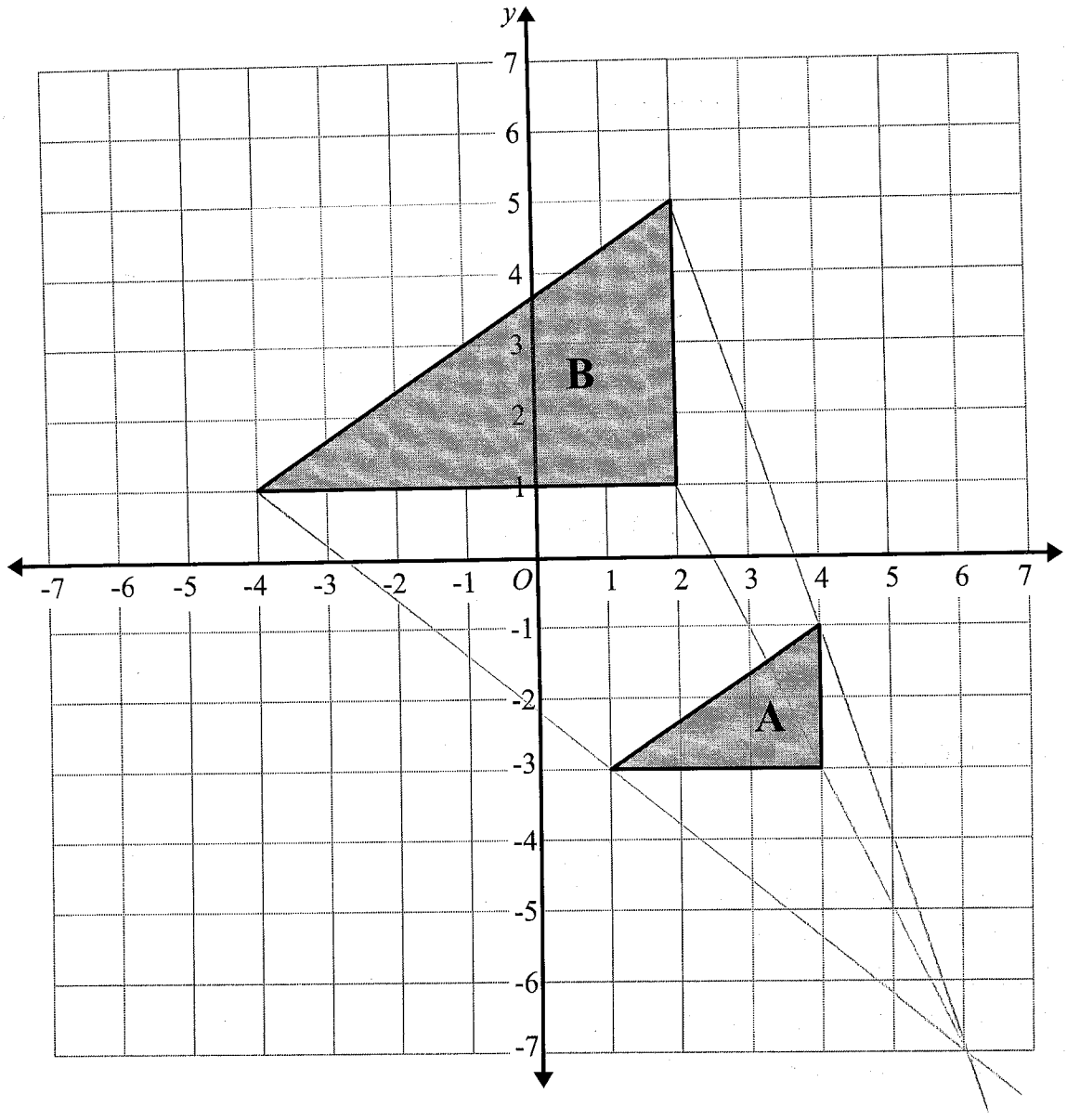

Describe fully the single transformation that maps triangle **A** on triangle **B**.

Enlargement, Scale Factor 2, Centre (6, -7)

(Total for question 1 is 2 marks)

2

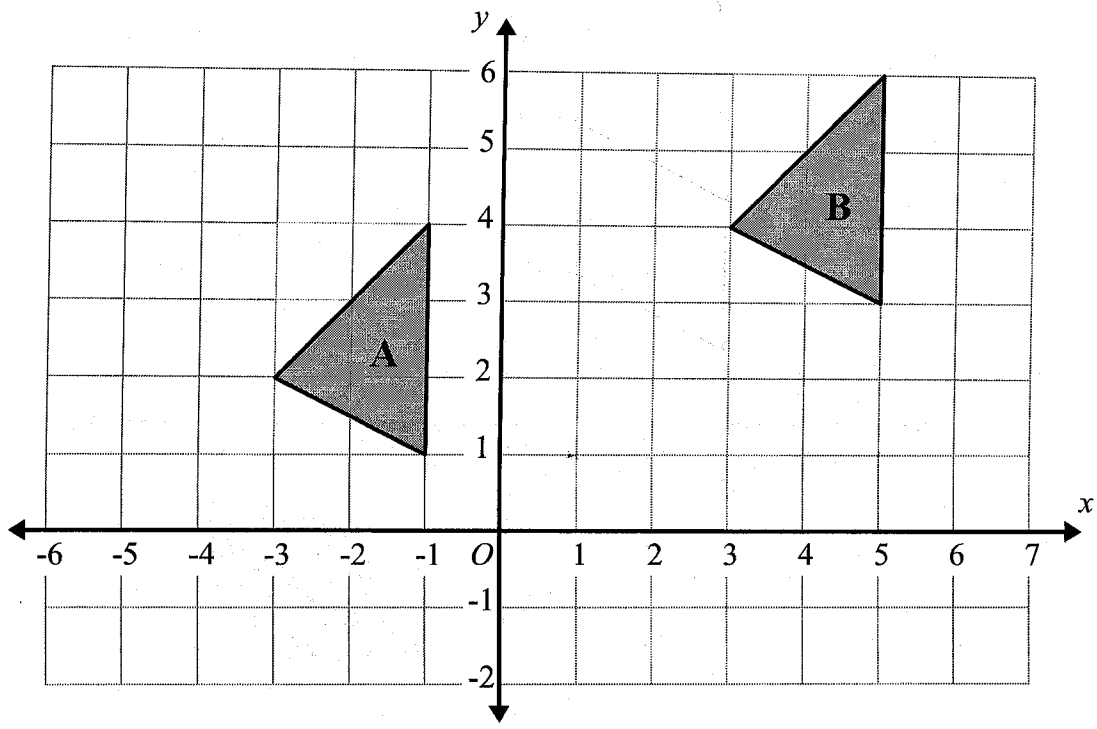

Describe fully the single transformation that maps triangle **A** on triangle **B**.

translation by the vector $\begin{pmatrix} 6 \\ 2 \end{pmatrix}$

(Total for question 2 is 2 marks)

3

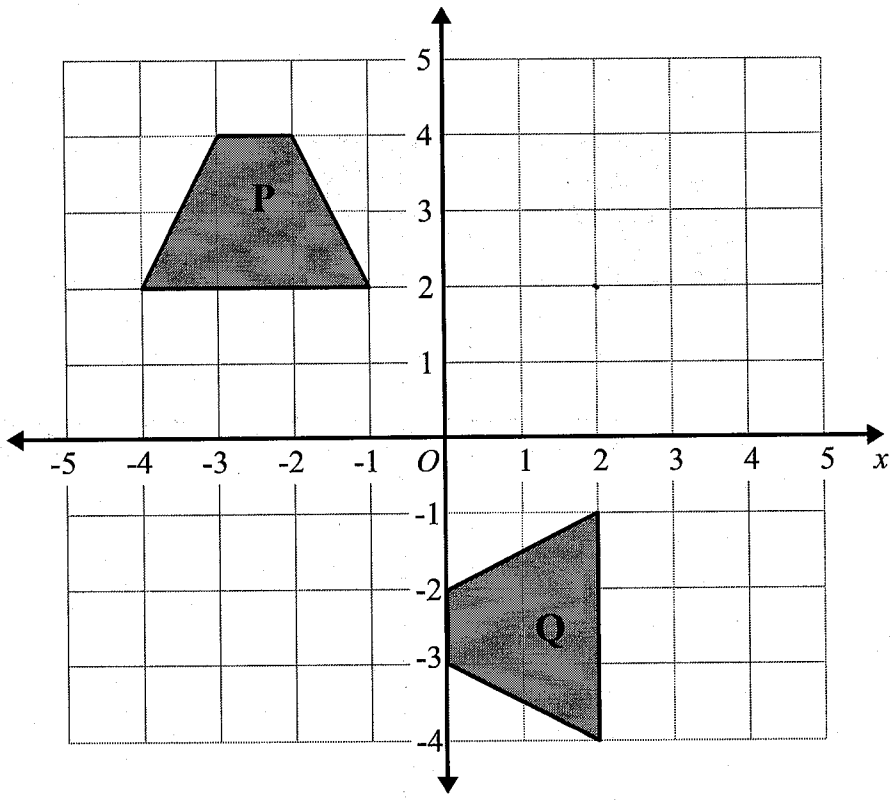

Describe fully the single transformation that maps trapezium **P** on trapezium **Q**.

Rotation, 90° Anti Clockwise, Centre (2, 2)

(Total for question 3 is 2 marks)

4

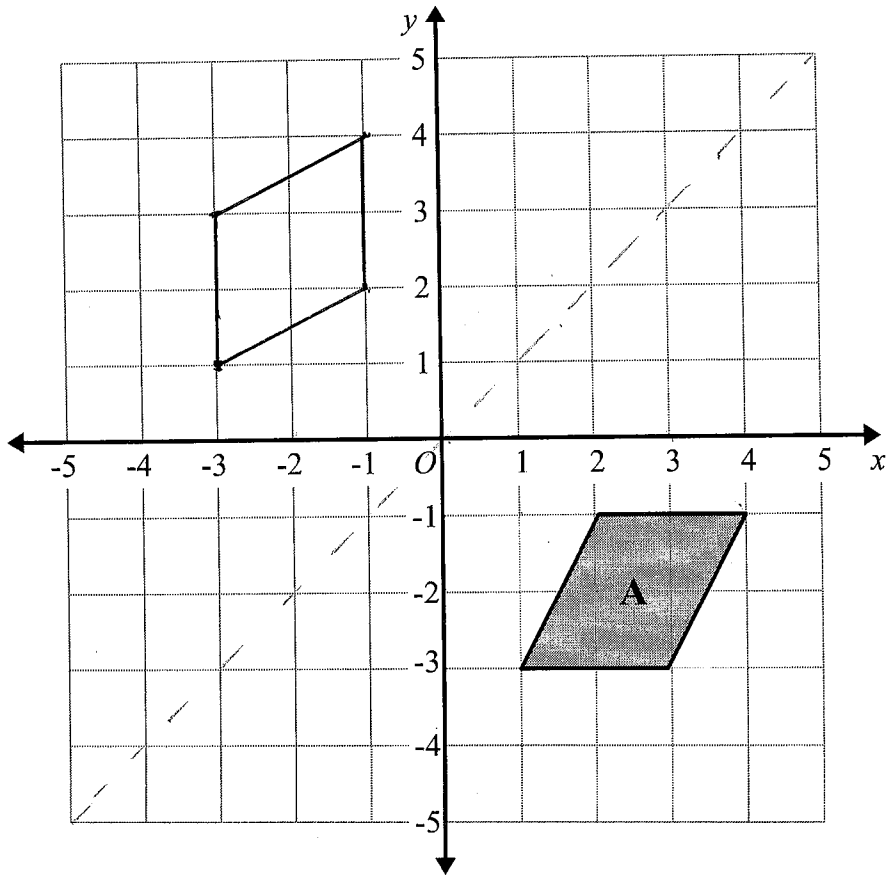

Reflect shape **A** in the line with equation $y = x$

(Total for question 4 is 2 marks)

5

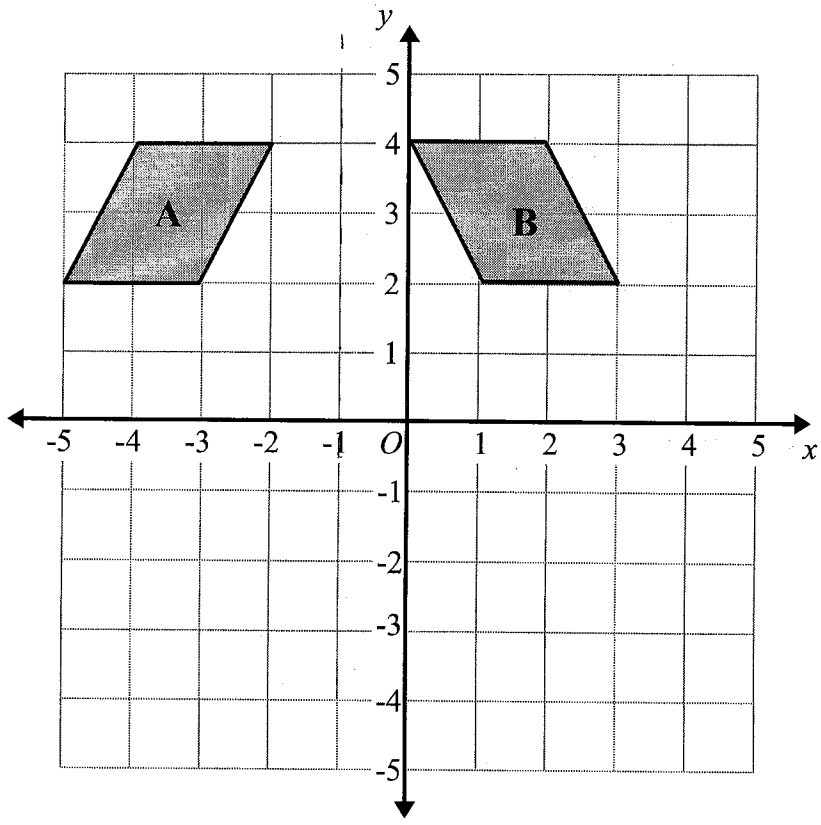

Describe fully the single transformation that maps shape **A** onto shape **B**.

Reflection in line $x = -1$

(Total for question 5 is 2 marks)

6

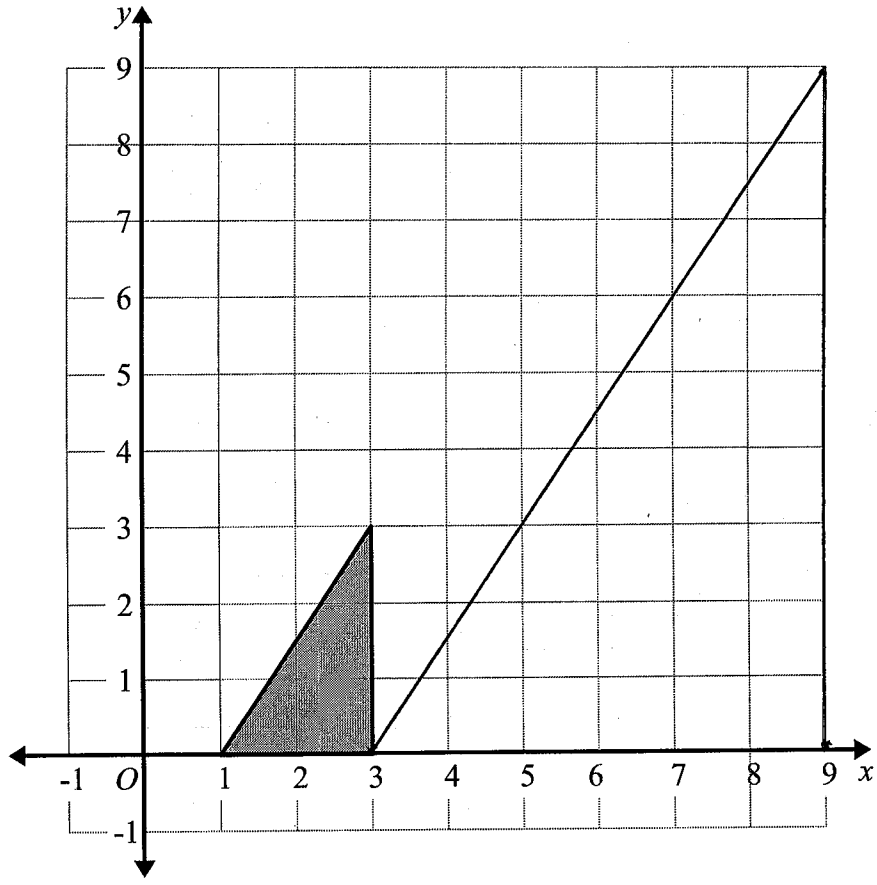

Enlarge the shaded triangle by scale factor 3, centre O

(Total for question 6 is 2 marks)

7

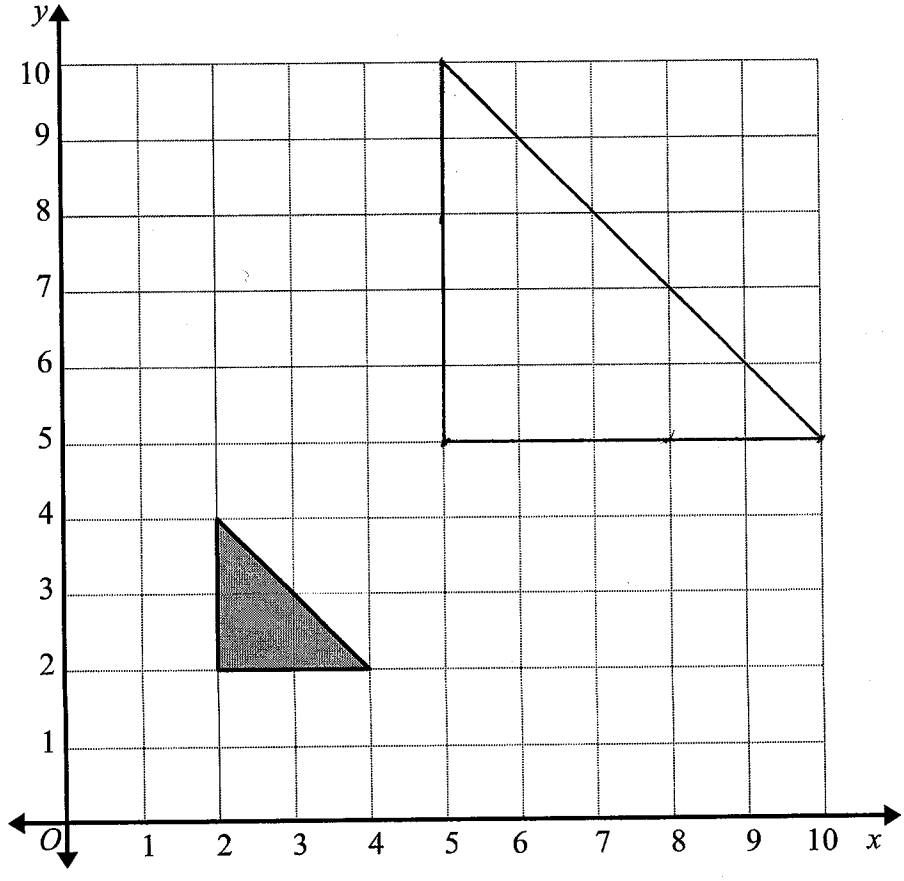

Enlarge the shaded triangle by scale factor 2.5, centre O.

(Total for question 7 is 2 marks)

8

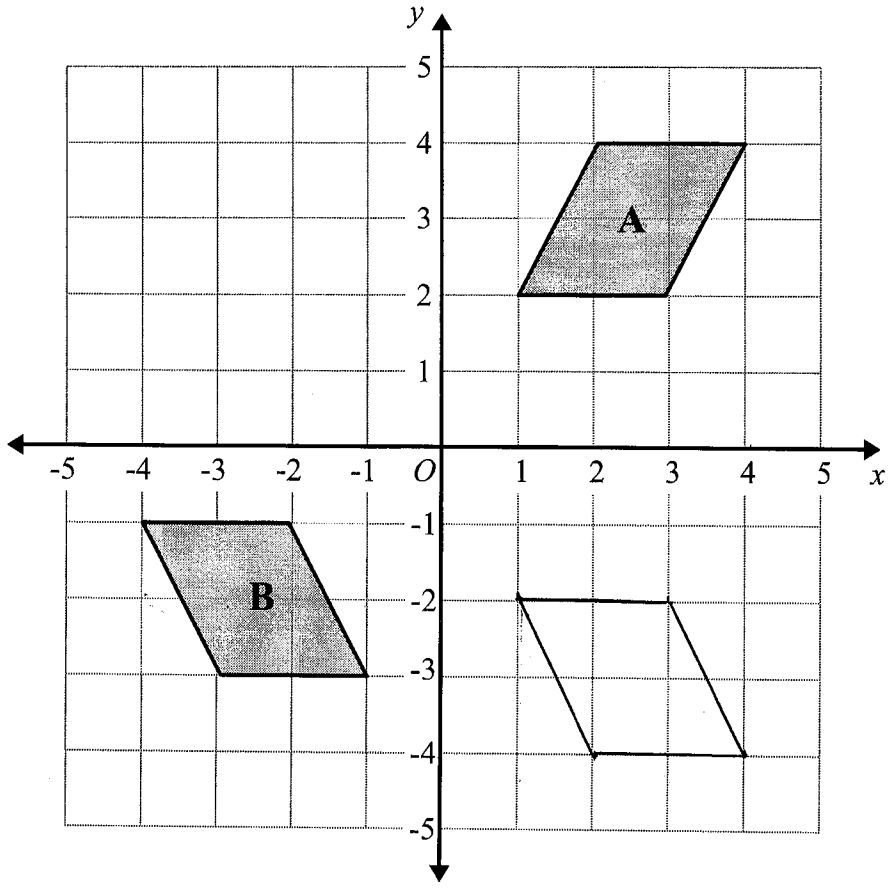

Shape **A** is transformed to shape **B** by a reflection in the x axis followed by a translation $\begin{pmatrix} p \\ q \end{pmatrix}$

Find the value of p and the value of q.

$p =$ ..... -5

$q =$ 1

(Total for question 8 is 3 marks)

9

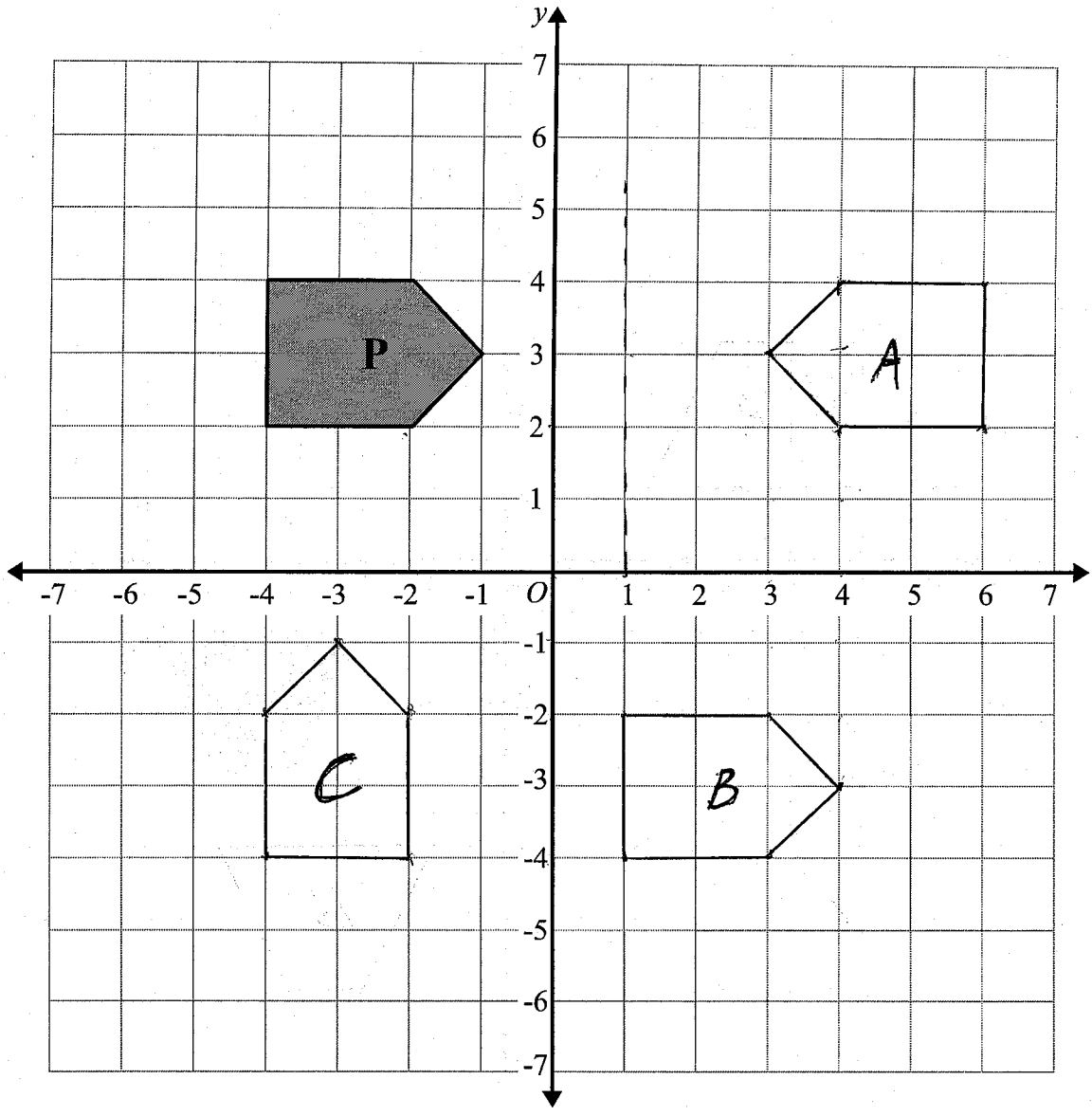

(a) Reflect shape **P** in the line $x = 1$.
Label the new shape **A**.

(b) Translate shape **P** by the vector $\begin{pmatrix} 5 \\ -6 \end{pmatrix}$
Label the new shape **B**.

(c) Rotate shape **P** by 90° anticlockwise, centre O
Label the new shape **C**

(Total for question 9 is 3 marks)

10

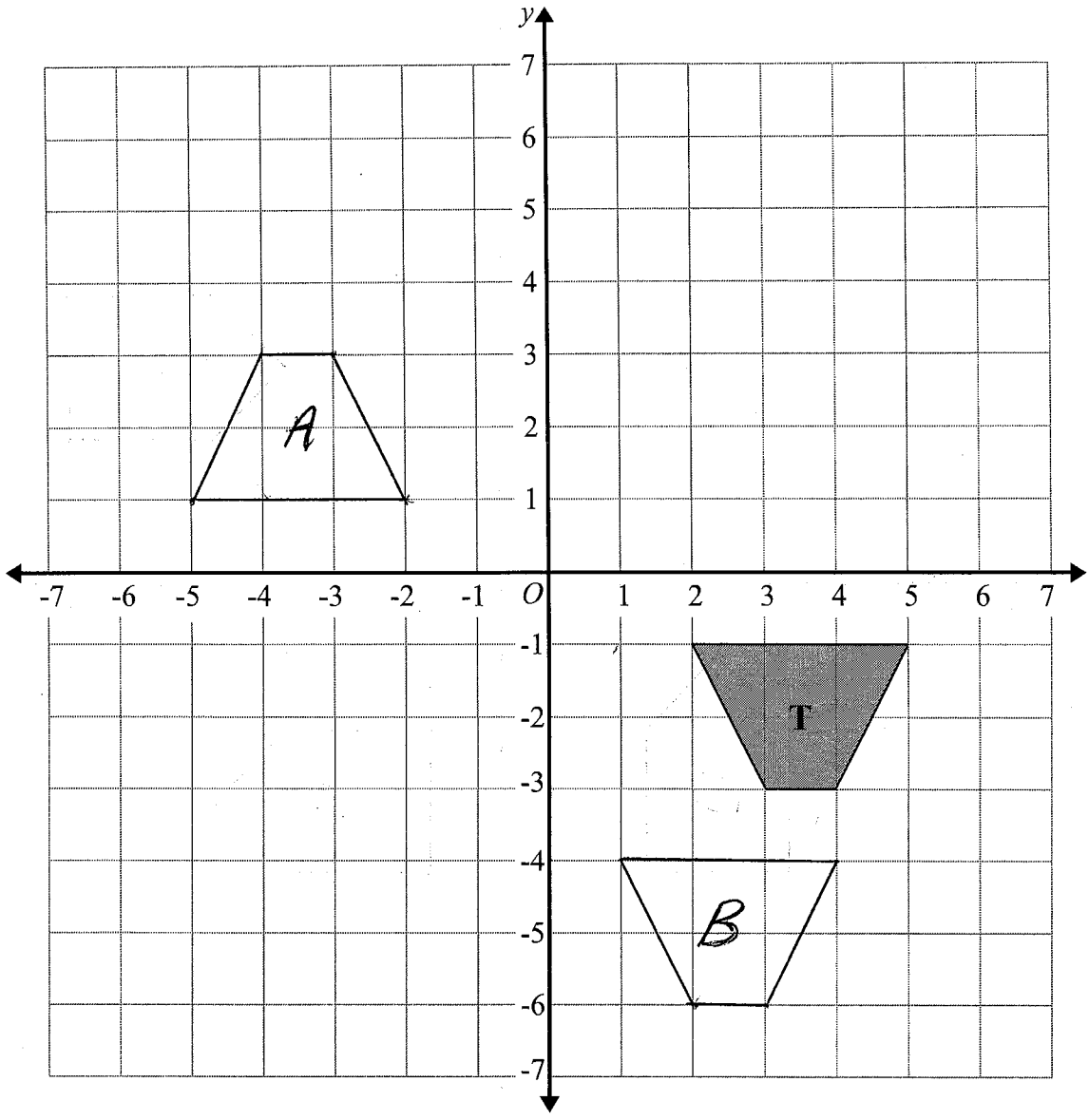

(a) Rotate trapezium **T** 180° about the origin.
Label the new trapezium **A**.

(b) Translate trapezium **T** by the vector $\begin{pmatrix} -1 \\ -3 \end{pmatrix}$
Label the new trapezium **B**.

(Total for question 10 is 2 marks)