Answer ALL questions.

Write your answers in the spaces provided.

You must write down all the stages in your working.

1 (a) Work out 3.67×4.2

$$\begin{array}{r} 367 \\ \times\ 42 \\ \hline 734 \\ 14680 \\ \hline 15414 \end{array}$$

15.414

(3)

(b) Work out $59.84 \div 1.6$

$$\frac{59.84}{1.6} = \frac{598.4}{16}$$

16
32
48
64
80
96
112
128
144
160

$$\begin{array}{r} 037.4 \\ 16\overline{)598.4} \end{array}$$

37.4

(3)

(Total for Question 1 is 6 marks)

P 6 4 6 3 0 A 0 2 2 4

DO NOT WRITE IN THIS AREA DO NOT WRITE IN THIS AREA DO NOT WRITE IN THIS AREA

2 $\mathscr{E}$ = {even numbers less than 19}
A = {6, 12, 18}
B = {2, 6, 14, 18}

Complete the Venn diagram for this information.

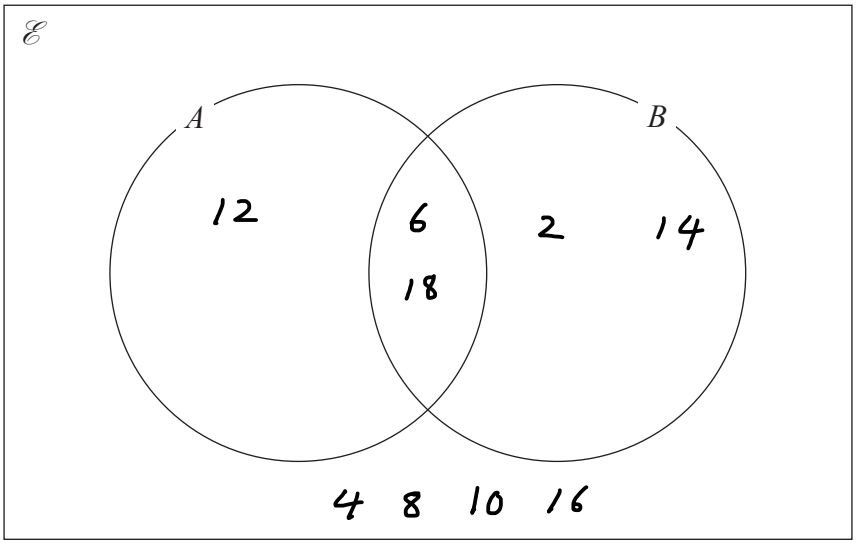

(Total for Question 2 is 3 marks)

3 Work out $4\frac{1}{5} - 2\frac{2}{3}$

Give your answer as a mixed number.

$\frac{21 \times 3}{5 \times 3} - \frac{8 \times 5}{3 \times 5}$

$\frac{63}{15} - \frac{40}{15} = \frac{23}{15} = 1\frac{8}{15}$

$1\frac{8}{15}$

(Total for Question 3 is 3 marks)

DO NOT WRITE IN THIS AREA
DO NOT WRITE IN THIS AREA
DO NOT WRITE IN THIS AREA

4 At the end of 2017

the value of Tamara's house was £220 000
the value of Rahim's house was £160 000

At the end of 2019

the value of Tamara's house had decreased by 20%
the value of Rahim's house had increased by 30%

At the end of 2019, whose house had the greater value?
You must show how you get your answer.

Tamara

$10\% = \frac{220000}{10} = 22000$

$20\% = 2 \times 22000 = 44000$

$$\begin{array}{r} 220000 \\ -\ 44000 \\ \hline 176000 \end{array}$$

£176000

Rahim

$10\% = \frac{160000}{10} = 16000$

$30\% = 3 \times 16000 = 48000$

$$\begin{array}{r} 160000 \\ +\ 48000 \\ \hline 208000 \end{array}$$

£208000

Rahim's House

(Total for Question 4 is 4 marks)

DO NOT WRITE IN THIS AREA
DO NOT WRITE IN THIS AREA
DO NOT WRITE IN THIS AREA

5 Rosie, Matilda and Ibrahim collect stickers.

$$\frac{\text{number of stickers}}{\text{Rosie has}} : \frac{\text{number of stickers}}{\text{Matilda has}} : \frac{\text{number of stickers}}{\text{Ibrahim has}} = 4:7:15$$

Ibrahim has 24 more stickers than Matilda.

Ibrahim has more stickers than Rosie.
How many more?

15 − 7 = 8

8 parts = 24 stickers
÷ 8 ÷ 8

1 part = 3 stickers

R : M : I
4 : 7 : 15
×3 ×3 ×3
12 : 21 : 45

I − R
45
− 12
33

33

(Total for Question 5 is 3 marks)

P 6 4 6 3 0 A 0 5 2 4

DO NOT WRITE IN THIS AREA
DO NOT WRITE IN THIS AREA
DO NOT WRITE IN THIS AREA

6 The diagram shows a prism.

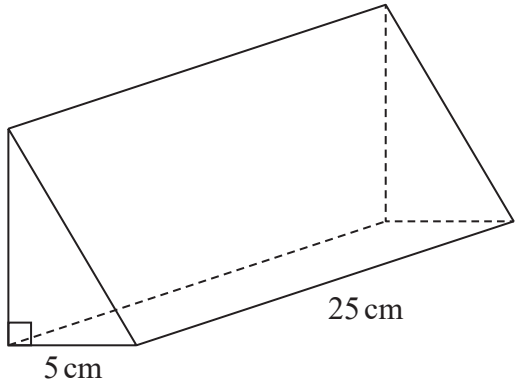

The cross section of the prism is a right-angled triangle.
The base of the triangle has length 5 cm

The prism has length 25 cm
The prism has volume 750 cm^3

Work out the height of the prism.

volume $= \frac{1}{2}$ base $\times$ height $\times$ length

$750 = \frac{1}{2}(5) \times$ height $\times 25$

$750 = \frac{125}{2} \times$ height

$1500 = 125 \times$ height

height $= \frac{1500}{125} = \frac{300}{25} = \frac{60}{5} = \underline{\underline{12}}$

.....12..... cm

(Total for Question 6 is 3 marks)

DO NOT WRITE IN THIS AREA
DO NOT WRITE IN THIS AREA
DO NOT WRITE IN THIS AREA

7 The diagram shows a cube with edges of length x cm and a sphere of radius 3 cm.

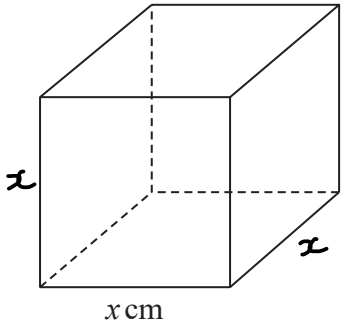

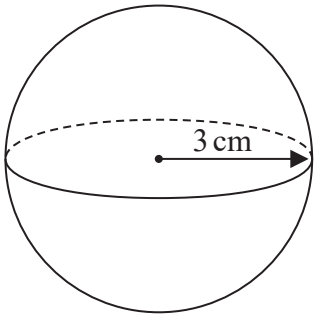

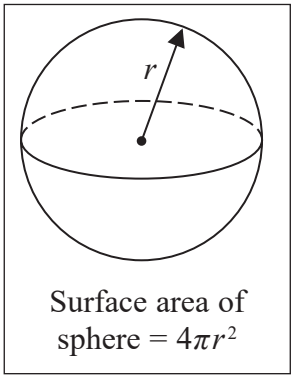

The surface area of the cube is equal to the surface area of the sphere.

Show that $x = \sqrt{k\pi}$ where k is an integer.

surface area of cube $= 6x^2$

surface area of sphere $= 4\pi r^2$

$= 4\pi(3)^2$

$= 36\pi$

$6x^2 = 36\pi$

$x^2 = 6\pi$

$x = \sqrt{6\pi}$

(Total for Question 7 is 4 marks)

DO NOT WRITE IN THIS AREA
DO NOT WRITE IN THIS AREA
DO NOT WRITE IN THIS AREA

8 Solve $x^2 = 5x + 24$

$x^2 - 5x - 24 = 0$

$(x - 8)(x + 3) = 0$

$x = 8 \quad x = -3$

$x = 8$ or $x = -3$

(Total for Question 8 is 3 marks)

9 (a) Write down the value of 7^0

1

(1)

(b) Find the value of $3 \times 3^6 \times 3^{-6}$

3

(1)

(c) Find the value of 2^{-4}

$\frac{1}{2^4}$

$\frac{1}{16}$

(1)

(d) Find the value of $27^{\frac{1}{3}}$

3

(1)

(Total for Question 9 is 4 marks)

DO NOT WRITE IN THIS AREA

DO NOT WRITE IN THIS AREA

DO NOT WRITE IN THIS AREA

10 The diagram shows a shape made from 6 identical squares.

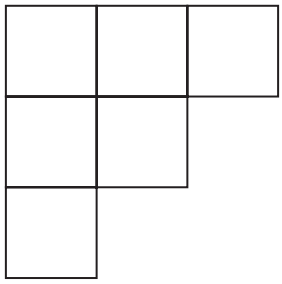

The total area of the shape is 5406 cm^2

(a) Find an estimate for the length of one side of each square.
Give your answer correct to the nearest whole number.

$\frac{5400}{6} = 900$ cm^2 each square

$\sqrt{900} = 30$ cm

30 cm

(3)

(b) Is your answer to part (a) an underestimate or an overestimate?
You must give a reason for your answer.

underestimate, I rounded the total area down

(1)

(Total for Question 10 is 4 marks)

DO NOT WRITE IN THIS AREA
DO NOT WRITE IN THIS AREA
DO NOT WRITE IN THIS AREA

11 The diagram shows two rectangles, **A** and **B**.

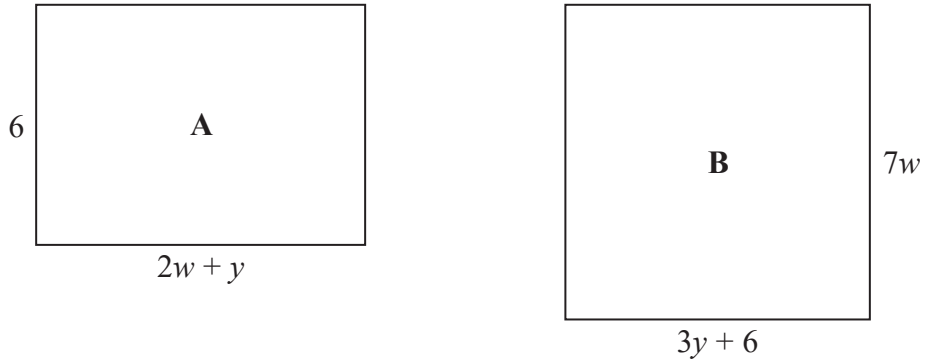

All measurements are in centimetres.

The area of rectangle **A** is equal to the area of rectangle **B**.

Find an expression for y in terms of w.

$$6(2w+y) = 7w(3y+6)$$
$$12w + 6y = 21wy + 42w$$
$$6y = 21wy + 30w$$
$$6y - 21wy = 30w$$
$$y(6-21w) = 30w$$
$$y = \frac{30w}{6-21w}$$

$y = \frac{30w}{6-21w}$

(Total for Question 11 is 4 marks)

DO NOT WRITE IN THIS AREA
DO NOT WRITE IN THIS AREA
DO NOT WRITE IN THIS AREA

DO NOT WRITE IN THIS AREA
DO NOT WRITE IN THIS AREA
DO NOT WRITE IN THIS AREA

12 The cumulative frequency table gives information about the heights, in cm, of 40 plants.

Height (h cm)	**Cumulative Frequency**
$0 < h \leqslant 5$	4
$0 < h \leqslant 10$	11
$0 < h \leqslant 15$	24
$0 < h \leqslant 20$	34
$0 < h \leqslant 25$	38
$0 < h \leqslant 30$	40

(a) On the grid, draw a cumulative frequency graph for this information.

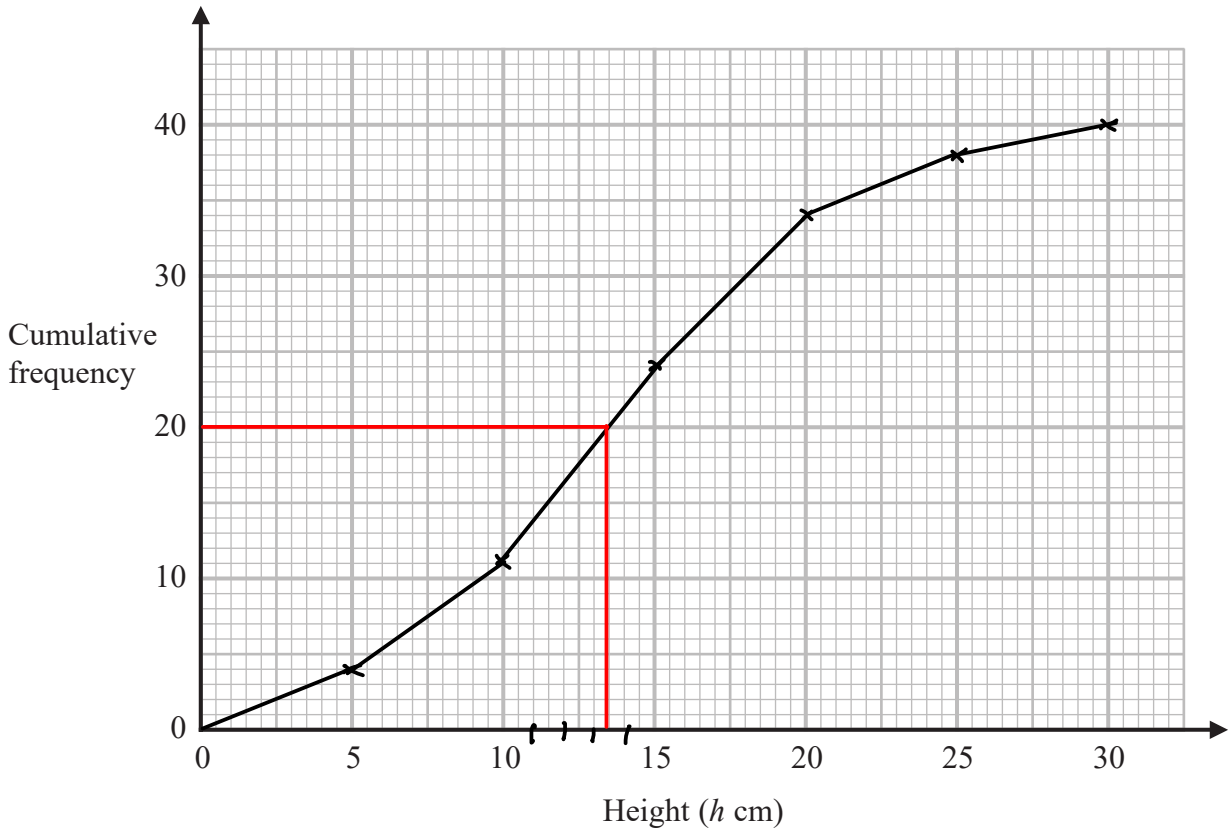

(2)

(b) Use the graph to find an estimate for the median height of the plants.

13.5 cm

(1)

(Total for Question 12 is 3 marks)

13 Ted is trying to change $0.\dot{4}\dot{3}$ to a fraction.

Here is the start of his method.

$$x = 0.\dot{4}\dot{3}$$

$$10x = 4.\dot{3}\dot{4}$$

$$10x - x = 4.\dot{3}\dot{4} - 0.\dot{4}\dot{3}$$

Evaluate Ted's method so far.

Ted has not made the recurring parts the same. He should have used $100x = 43.\dot{4}\dot{3}$

Then $100x - x$

(Total for Question 13 is 1 mark)

DO NOT WRITE IN THIS AREA
DO NOT WRITE IN THIS AREA
DO NOT WRITE IN THIS AREA

14 Here is a shape with all its measurements in centimetres.

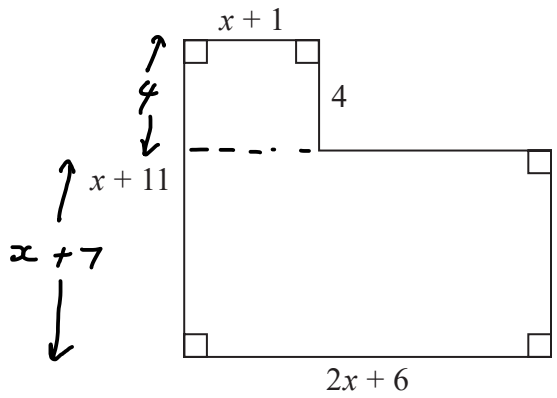

The area of the shape is A cm^2

Show that $A = 2x^2 + 24x + 46$

$$A = 4(x+1) + (x+7)(2x+6)$$

$$= 4x + 4 + 2x^2 + 6x + 14x + 42$$

$$= \underline{\underline{2x^2 + 24x + 46}}$$

(Total for Question 14 is 3 marks)

DO NOT WRITE IN THIS AREA
DO NOT WRITE IN THIS AREA
DO NOT WRITE IN THIS AREA

15 Show that $\frac{4x+3}{2x} + \frac{3}{5}$ can be written in the form $\frac{ax+b}{cx}$ where a, b and c are integers.

$$\frac{\times 5 \quad 4x+3}{\times 5 \quad 2x} + \frac{3 \quad \times 2x}{5 \quad \times 2x}$$

$$\frac{5(4x+3)}{10x} + \frac{6x}{10x}$$

$$\frac{5(4x+3)+6x}{10x}$$

$$\frac{20x+15+6x}{10x}$$

$$\frac{26x+15}{10x}$$

(Total for Question 15 is 3 marks)

DO NOT WRITE IN THIS AREA
DO NOT WRITE IN THIS AREA
DO NOT WRITE IN THIS AREA

16 There are only 3 red counters and 5 yellow counters in a bag.

Jude takes at random 3 counters from the bag.

Work out the probability that he takes exactly one red counter.

$$P(RYY) = \frac{\cancel{3}^{1}}{\cancel{8}_{2}} \times \frac{5}{7} \times \frac{\cancel{4}^{1}}{\cancel{6}_{2}} = \frac{5}{28}$$

$$P(YRY) = \frac{5}{8} \times \frac{3}{7} \times \frac{4}{6} = \frac{5}{28}$$

$$P(YYR) = \frac{5}{8} \times \frac{4}{7} \times \frac{3}{6} = \frac{5}{28}$$

$$\frac{5}{28} + \frac{5}{28} + \frac{5}{28} = \frac{15}{28}$$

$\frac{15}{28}$

(Total for Question 16 is 4 marks)

P 6 4 6 3 0 A 0 1 5 2 4

DO NOT WRITE IN THIS AREA

DO NOT WRITE IN THIS AREA

DO NOT WRITE IN THIS AREA

17 On the grid show, by shading, the region that satisfies all of these inequalities.

$2y + 4 < x$ $\qquad$ $x < 3$ $\qquad$ $y < 6 - 3x$

Label the region **R**.

$y < \frac{x - 4}{2}$

x	0	2	4
y	−2	−1	0

x	0	1	2
y	6	3	0

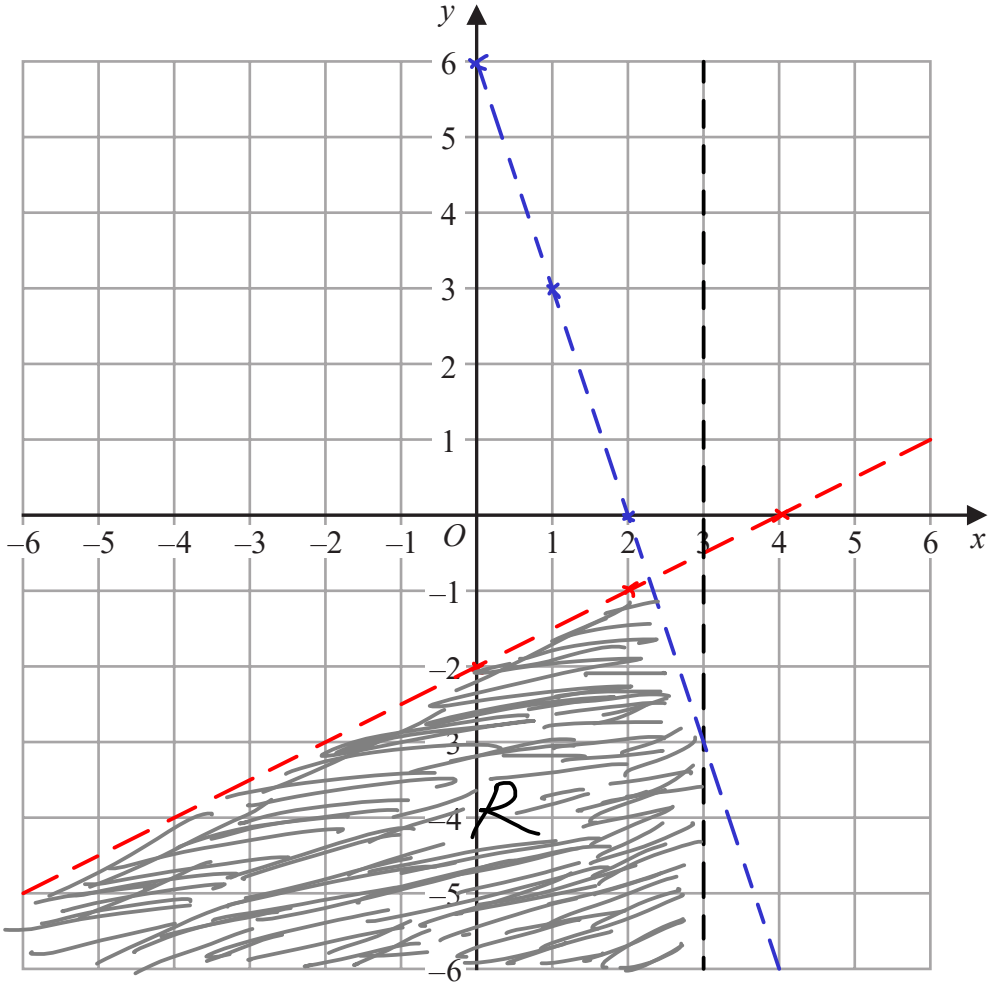

(Total for Question 17 is 3 marks)

DO NOT WRITE IN THIS AREA
DO NOT WRITE IN THIS AREA
DO NOT WRITE IN THIS AREA

18 Here is trapezium *ABCD*.

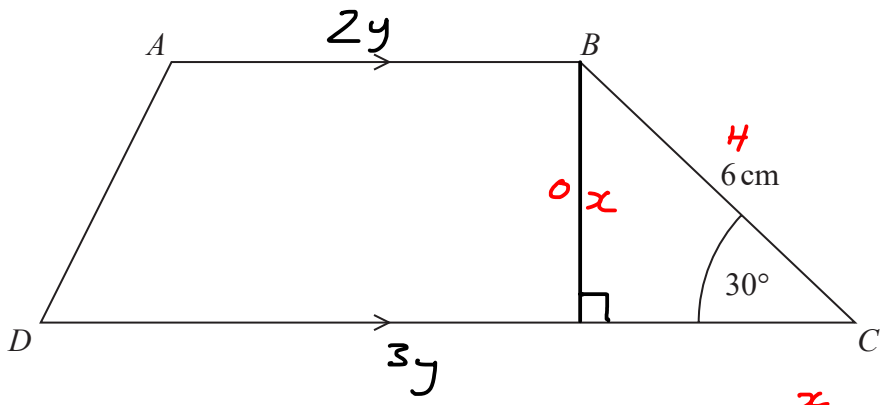

$\sin(30) = \frac{1}{2}$

The area of the trapezium is 66 cm²

the length of *AB* : the length of *CD* = 2 : 3

$2y : 3y$

Find the length of *AB*.

$\sin(30) = \frac{x}{6}$

$x = 6\sin(30)$

$= 6\left(\frac{1}{2}\right)$

$= 3$

$\frac{1}{2}(2y + 3y)(3) = 66$

$\frac{1}{2}(2y + 3y) = 22$

$2y + 3y = 44$

$5y = 44$

$y = \frac{44}{5} = 8\frac{4}{5}$

$= 8.8$

$2y = 2(8.8)$

$= \underline{\underline{17.6 \text{ cm}}}$

17.6 cm

(Total for Question 18 is 5 marks)

DO NOT WRITE IN THIS AREA
DO NOT WRITE IN THIS AREA
DO NOT WRITE IN THIS AREA

19 Show that $\frac{8+\sqrt{12}}{5+\sqrt{3}}$ can be written in the form $\frac{a+\sqrt{3}}{b}$, where a and b are integers.

$\sqrt{12} = \sqrt{4}\sqrt{3}$

$= 2\sqrt{3}$

$\frac{(8+2\sqrt{3})(5-\sqrt{3})}{(5+\sqrt{3})(5-\sqrt{3})}$

$\frac{40-8\sqrt{3}+10\sqrt{3}-6}{25-5\sqrt{3}+5\sqrt{3}-3}$

$\frac{34+2\sqrt{3}}{22} = \frac{17+\sqrt{3}}{11}$

(Total for Question 19 is 4 marks)

DO NOT WRITE IN THIS AREA
DO NOT WRITE IN THIS AREA
DO NOT WRITE IN THIS AREA

20 The diagram shows the graph of $x^2 + y^2 = 30.25$

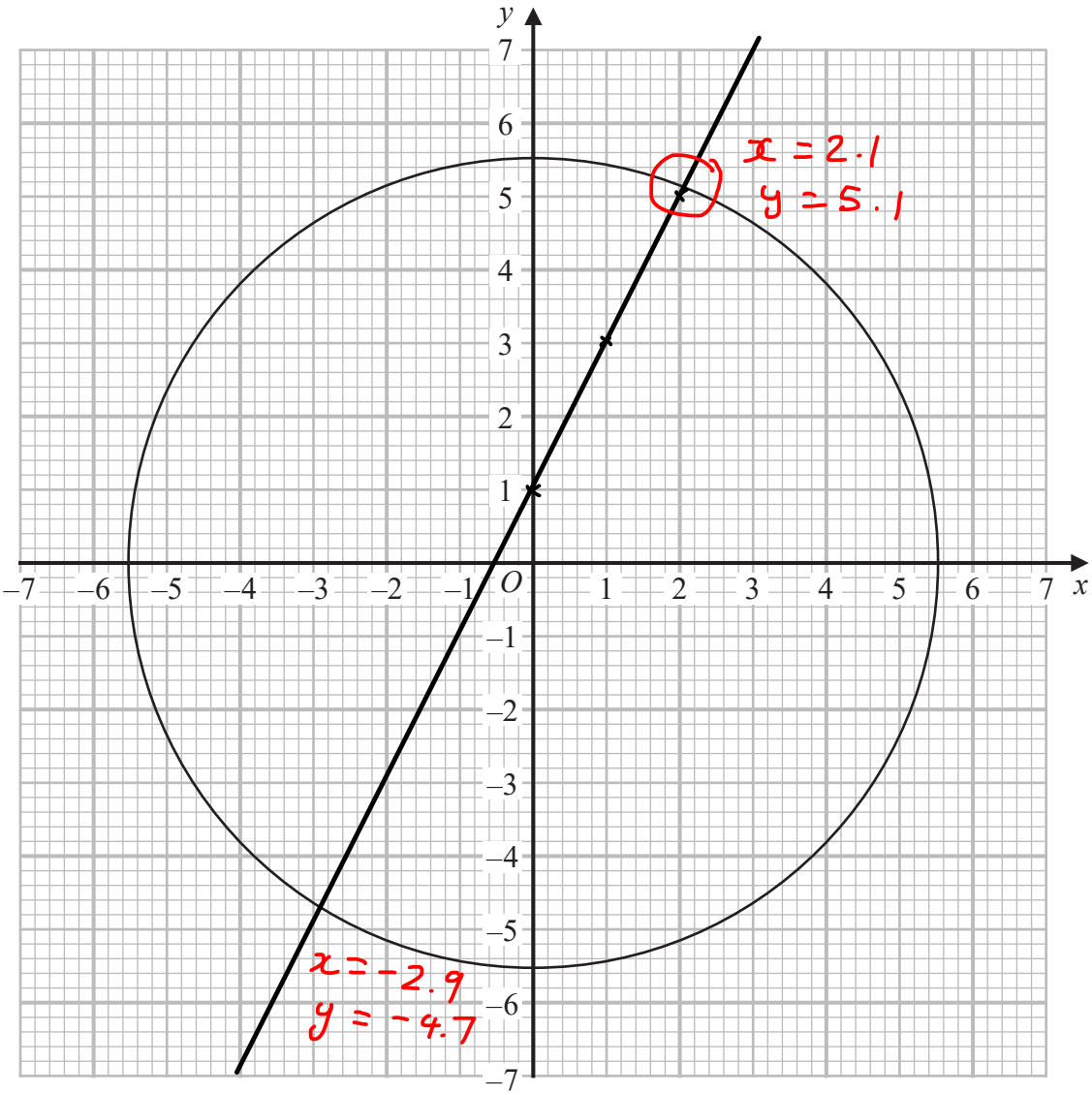

Use the graph to find estimates for the solutions of the simultaneous equations

$$x^2 + y^2 = 30.25$$
$$y - 2x = 1$$

$y = 2x + 1$

x	0	1	2
y	1	3	5

$x = -2.9$, $y = -4.7$ and $x = 2.1$ $y = 5.1$

(Total for Question 20 is 3 marks)

P 6 4 6 3 0 A 0 1 9 2 4

DO NOT WRITE IN THIS AREA
DO NOT WRITE IN THIS AREA
DO NOT WRITE IN THIS AREA

21 The functions f and g are such that

$$f(x) = 3x^2 + 1 \quad \text{for } x > 0 \qquad \text{and} \qquad g(x) = \frac{4}{x^2} \quad \text{for } x > 0$$

(a) Work out gf(1)

$f(1) = 3(1)^2 + 1$

$= 4$

$g(4) = \frac{4}{4^2} = \frac{1}{4}$

$\frac{1}{4}$

(2)

The function h is such that $h = (fg)^{-1}$

(b) Find h(x)

$fg(x) = 3\left(\frac{4}{x^2}\right)^2 + 1$

$= 3\left(\frac{16}{x^4}\right) + 1$

$= \frac{48}{x^4} + 1$

$y = \frac{48}{x^4} + 1$

$x = \frac{48}{y^4} + 1$

$x - 1 = \frac{48}{y^4}$

$y^4(x-1) = 48$

$y^4 = \frac{48}{x-1}$

$y = \sqrt[4]{\frac{48}{x-1}}$

$h(x) = \sqrt[4]{\frac{48}{x-1}}$

$h(x) = \sqrt[4]{\frac{48}{x-1}}$

(4)

(Total for Question 21 is 6 marks)

DO NOT WRITE IN THIS AREA
DO NOT WRITE IN THIS AREA
DO NOT WRITE IN THIS AREA

22 Find the coordinates of the turning point on the curve with equation $y = 9 + 18x - 3x^2$
You must show all your working.

$$y = -3x^2 + 18x + 9$$
$$= -3(x^2 - 6x - 3)$$
$$= -3[(x-3)^2 - 9 - 3]$$
$$= -3[(x-3)^2 - 12]$$
$$= -3(x-3)^2 + 36$$

(3 , 36)

(Total for Question 22 is 4 marks)

TOTAL FOR PAPER IS 80 MARKS

DO NOT WRITE IN THIS AREA
DO NOT WRITE IN THIS AREA
DO NOT WRITE IN THIS AREA