1

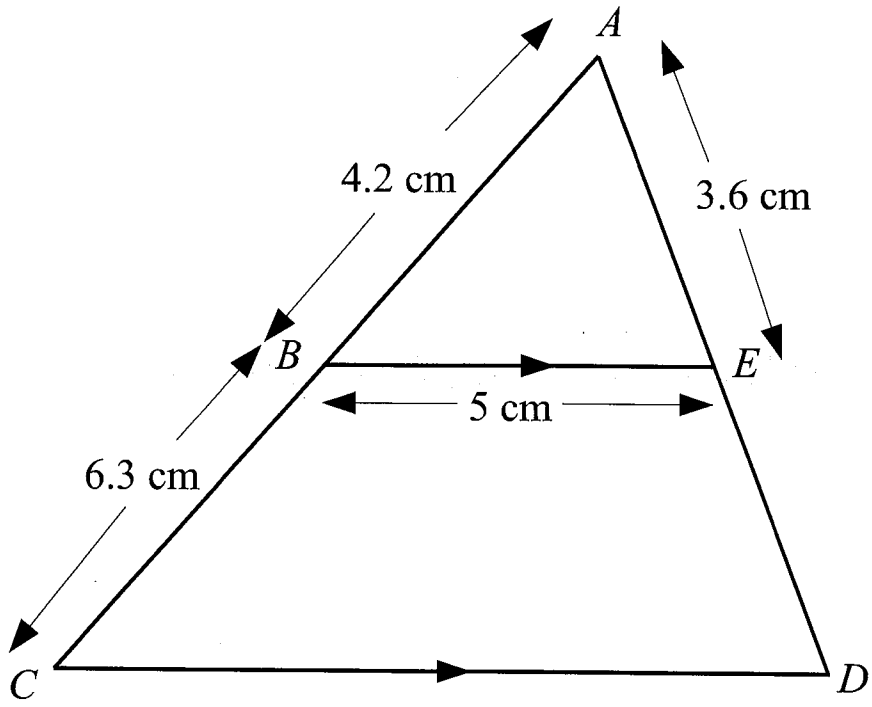

BE is parallel to *CD*.
ABC and *AED* are straight lines.
AB = 4 cm, *BC* = 6 cm, *BE* = 5 cm, *AE* = 4.8 cm.

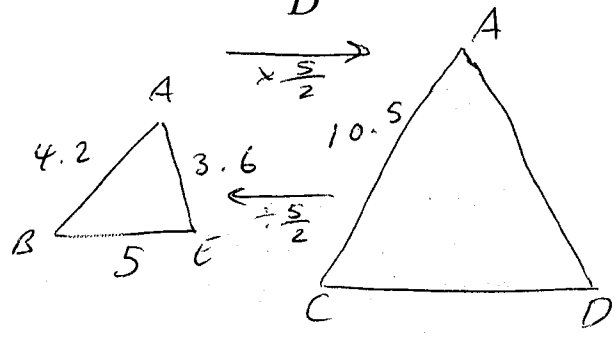

(a) Calculate the length of *CD*.

scale factor $= \frac{10.5}{4.2} = \frac{5}{2}$

$5 \times \frac{5}{2} = 12.5$

12.5 cm

(2)

(b) Calculate the length of *ED*.

$AD = 3.6 \times \frac{5}{2} = 9$

$9 - 3.6 = 5.4$

5.4 cm

(2)

(Total for Question 1 is 4 marks)

2 The points A, B, C and D lie in order on a straight line.

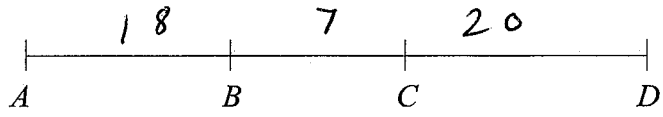

$AB:BD = 2:3$ and $AC:CD = 5:4$

Find $AB:BC:CD$

5 PARTS
x 9

9 PARTS
x 5

AB : BD
18 : 27

AC : CD
25 : 20

AB = 18 PARTS
BC = 25 − 18 = 7 PARTS
CD = 20 PARTS

18 : 7 : 20

(Total for Question 2 is 3 marks)

3

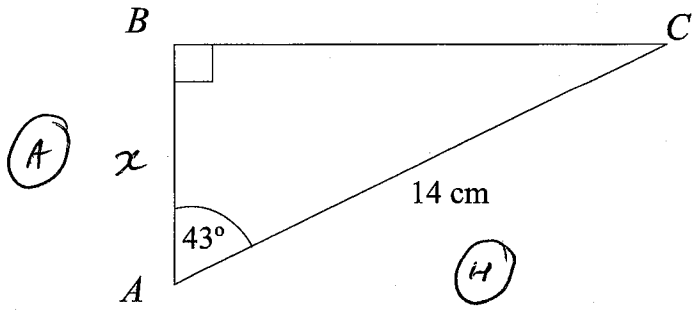

Calculate the length AB.

$$\cos\theta = \frac{A}{H}$$

$$\cos(43) = \frac{x}{14}$$

$$x = 14\cos(43)$$

$$= 10.2 \text{ cm (1dp)}$$

10.2 cm

(Total for Question 3 is 2 marks)

4 The diagram shows two straight lines.
The equation of the lines are $y = 2x + 1$ and $y = 3x - 6$

Work out the coordinates of the point where the line intersect.

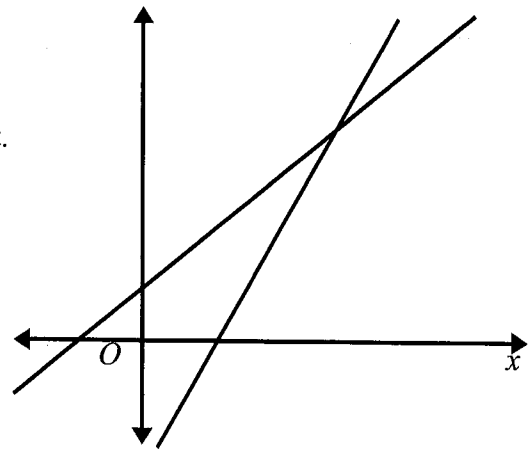

$2x + 1 = 3x - 6$
$-2x \qquad -2x$

$1 = x - 6$
$+6 \qquad +6$

$7 = x$

$y = 2(7) + 1$
$= 14 + 1$
$= 15$

(7, 15)

(Total for Question 4 is 3 marks)

---

5 Sweets are sold in small packs and in big packs.
There is a total of 192 sweets in 4 small packs and 3 big packs.
There is a total of 177 sweets in 5 small packs and 2 big packs.

Work out the number of sweets in each small pack and in each big pack.

$4s + 3b = 192 \quad \times 5$
$5s + 2b = 177 \quad \times 4$

$20s + 15b = 960$
$-$
$20s + 8b = 708$

$7b = 252$
$b = 36$

$4s + 3(36) = 192$
$4s + 108 = 192$
$4s = 84$
$s = 21$

Small Pack 21

Big Pack 36

(Total for Question 5 is 3 marks)

6 The diagram shows a solid hemisphere with a radius of 9 cm.

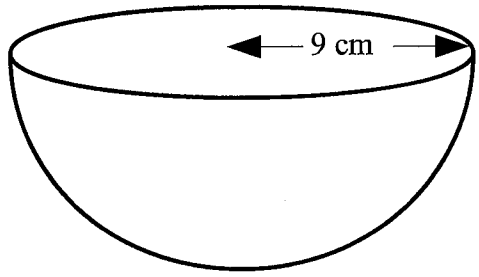

Volume of sphere $= \frac{4}{3}\pi r^3$

Surface area of sphere $= 4\pi r^2$

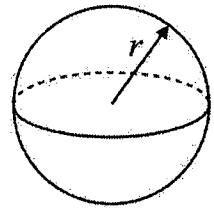

Work out the total surface area of the hemisphere.
Give your answer in terms of π.

Area of circle $= \pi(9)^2$

$= 81\pi$

Curved area $= 2\pi(9)^2$

$= 162\pi$

Total s.a $= 81\pi + 162\pi$

$= \underline{243\pi}$

243π cm^2

(Total for Question 6 is 3 marks)

7 Here are four graphs.

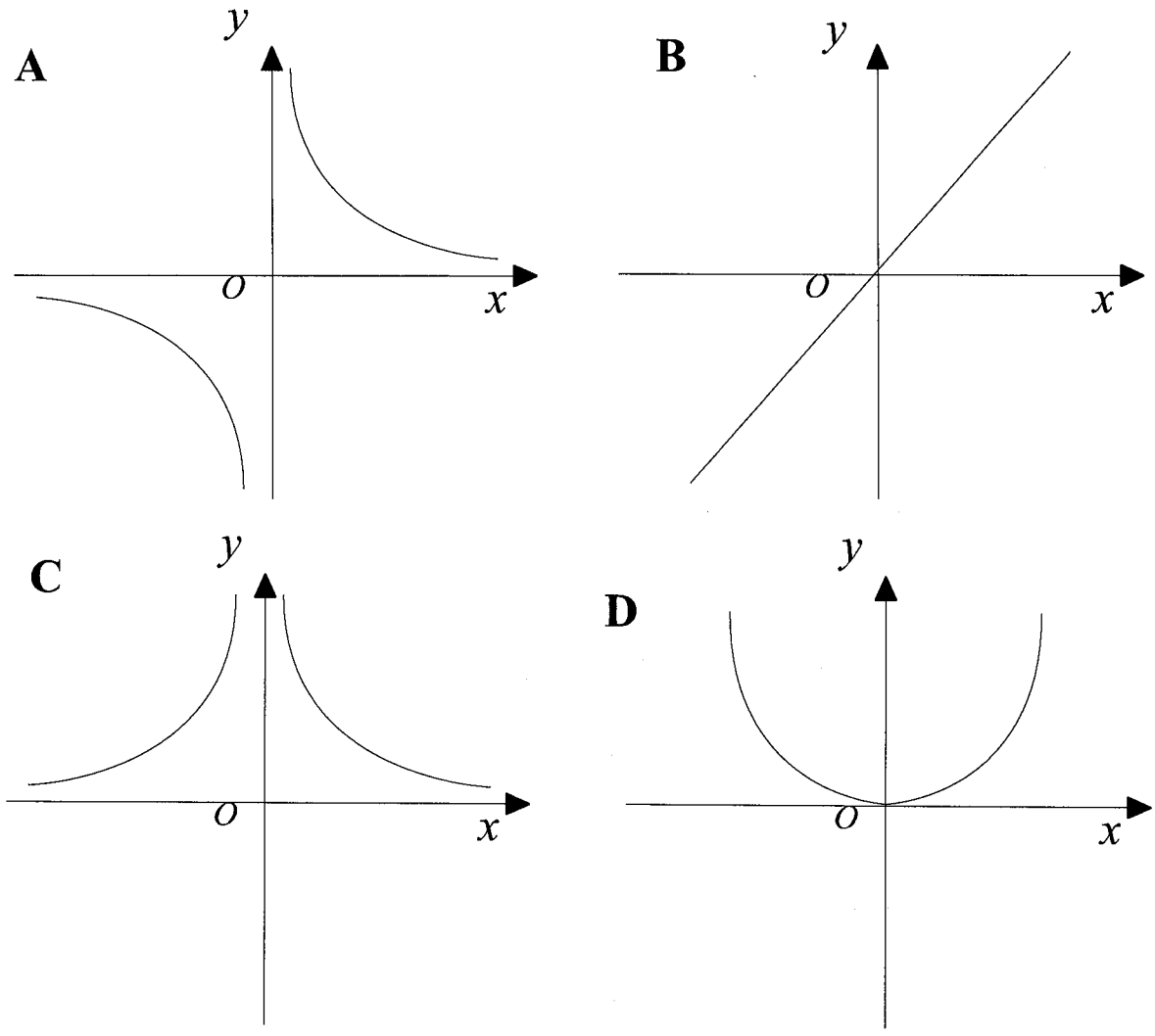

Match each graph with a statement in the table below.

Proportionality relationship	**Graph letter**
y is directly proportional to x	B
y is inversely proportional to x	A
y is directly proportional to x^2	D
y is inversely proportional to x^2	C

(Total for Question 7 is 2 marks)

8 Write down the exact value of tan (30)

$\frac{\sqrt{3}}{3}$

(Total for Question 8 is 1 mark)

---

9 AOB is a sector of a circle, centre O and radius 10 cm.
The length of arc AB is 15 cm.

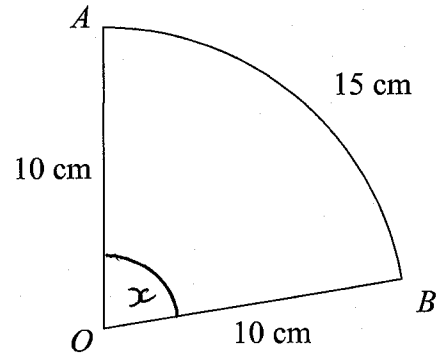

Find the area of the sector.

$$\text{Arc length} = \frac{\theta}{360} \times 2\pi r$$

$$15 = \frac{x}{360} \times 2\pi(10)$$

$$15 = \frac{20\pi x}{360}$$

$$5400 = 20\pi x$$

$$x = \frac{5400}{20\pi} = \frac{270}{\pi} = 85.94\ldots^{\circ}$$

$$\text{Sector area} = \frac{\text{"}85.94\text{"}}{360} \times \pi(10)^2$$

$$= 75 \text{ cm}^2$$

75 cm^2

(Total for Question 9 is 4 marks)