1

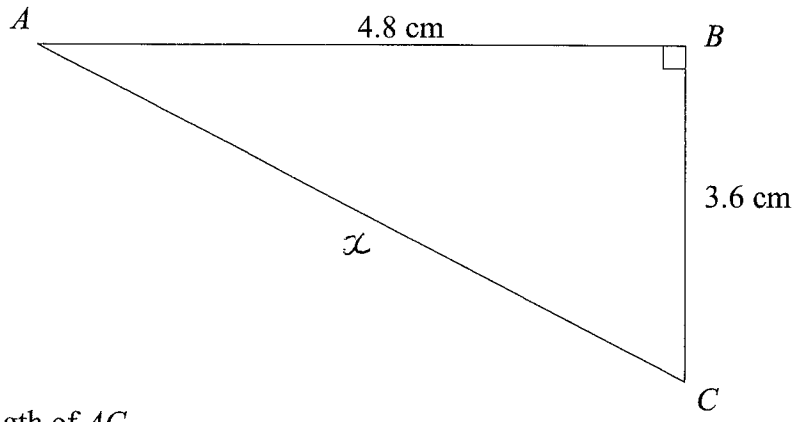

Calculate the length of AC.

$$3.6^2 + 4.8^2 = x^2$$
$$36 = x^2$$
$$x = \sqrt{36}$$
$$= 6$$

.....6.....cm

(Total for question 1 is 3 marks)

2

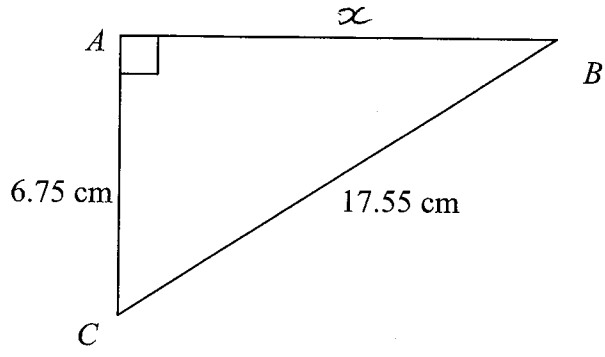

Calculate the length of ~~BC~~ AB.

$$x^2 + 6.75^2 = 17.55^2$$
$$x^2 = 17.55^2 - 6.75^2$$
$$x^2 = 262.44$$
$$x = \sqrt{262.44}$$
$$= 16.2$$

.....16.2.....cm

(Total for question 2 is 3 marks)

3

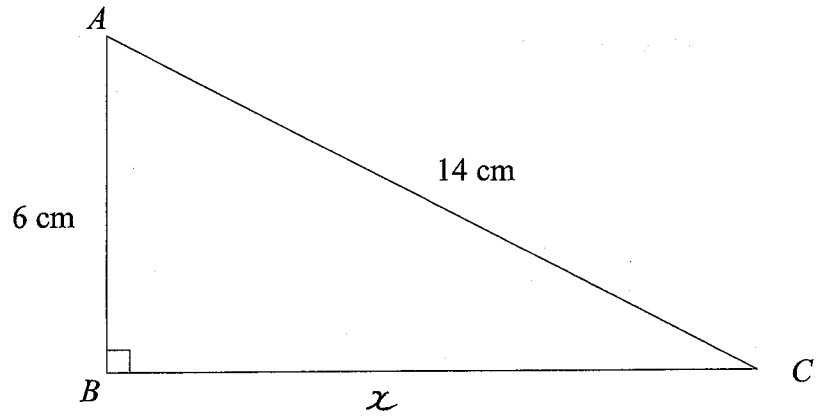

Calculate the length of *BC*.
Give your answer to 1 decimal place.

$x^2 + 6^2 = 14^2$

$x^2 = 14^2 - 6^2$

$x^2 = 160$

$x = \sqrt{160}$

$= 12.6$ (1dp)

.....12.6.....cm

(Total for question 3 is 3 marks)

4

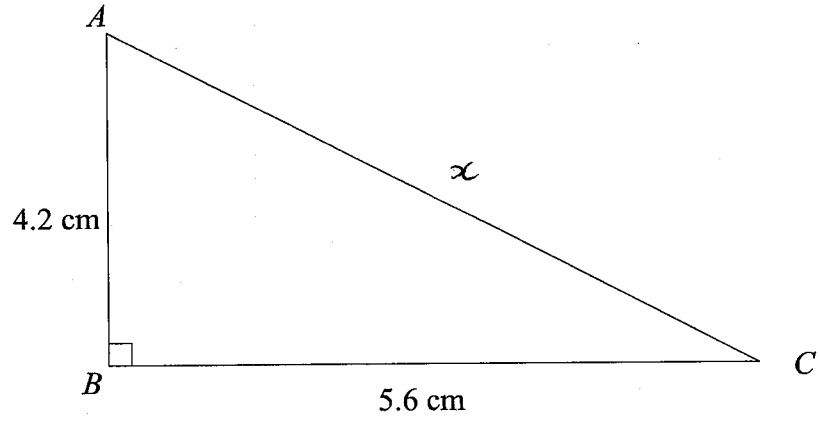

Calculate the length of *AC*.

$4.2^2 + 5.6^2 = x^2$

$49 = x^2$

$x = \sqrt{49}$

$= 7$

.....7.....cm

(Total for question 4 is 3 marks)

5 Calculate the length of the *AD*.
Give your answer to 3 significant figures.

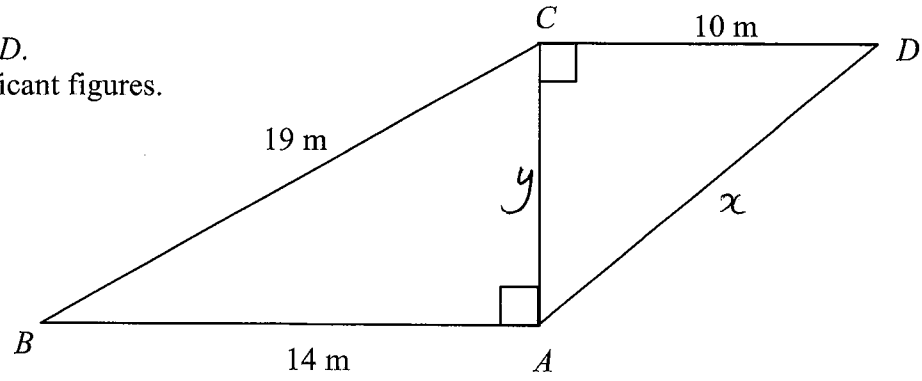

$14^2 + y^2 = 19^2$

$y^2 = 19^2 - 14^2$

$y^2 = 165$

$y = \sqrt{165}$

$= 12.84523...$

$10^2 + "12.84523"^2 = x^2$

$265 = x^2$

$x = \sqrt{265}$

$= 16.3$ (3sf)

16.3 .....m

(Total for question 5 is 4 marks)

---

6 Calculate the length of the *AB*.
Give your answer to 3 significant figures.

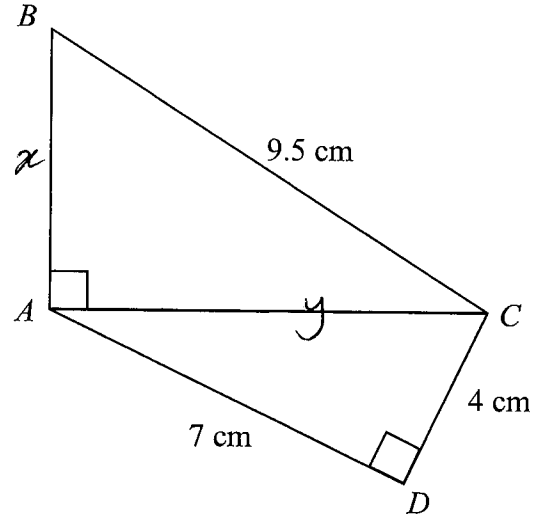

$4^2 + 7^2 = y^2$

$65 = y^2$

$x^2 + y^2 = 9.5^2$

$x^2 + 65 = 9.5^2$

$x^2 = 9.5^2 - 65$

$x^2 = 25.25$

$x = \sqrt{25.25}$

$= 5.02$ (3sf)

5.02 .....cm

(Total for question 5 is 4 marks)

7

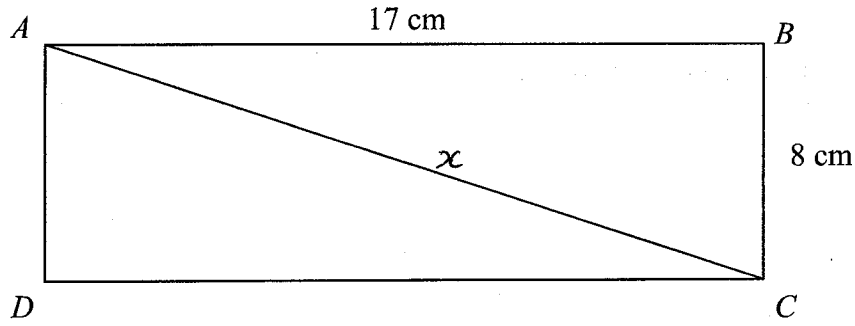

ABCD is a rectangle .
Calculate the length of the diagonal *AC*.

Give your answer correct to 1 decimal place.

$8^2 + 17^2 = x^2$

$353 = x^2$

$x = \sqrt{353}$

$x = 18.8$ (1dp)

.....18.8.....cm

(Total for question 7 is 3 marks)

---

8 *ABCD* is a trapezium.

Calculate the length of *BC*.

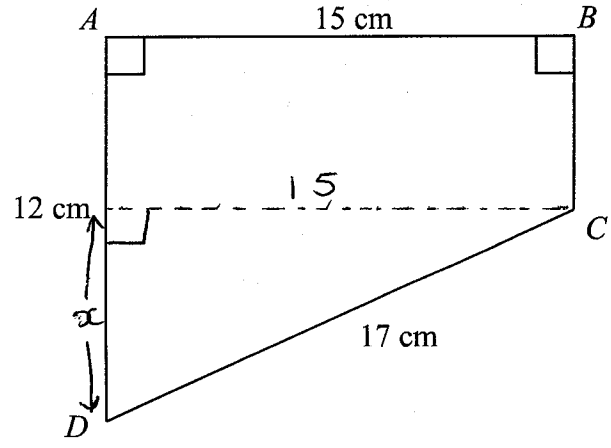

$x^2 + 15^2 = 17^2$

$x^2 = 17^2 - 15^2$

$x^2 = 64$

$x = \sqrt{64}$

$= 8$

$BC = 12 - 8 = 4$

.....4.....cm

(Total for question 8 is 3 marks)

9 *ABC* is an isosceles triangle.

Calculate the perpendicular height of *ABC*.
Give your answer correct to 3 significant figures..

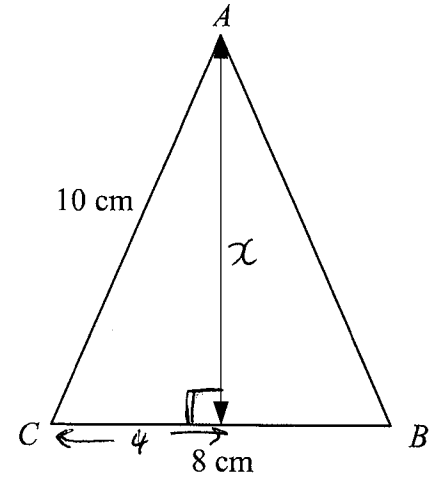

$x^2 + 4^2 = 10^2$

$x^2 = 10^2 - 4^2$

$x^2 = 84$

$x = \sqrt{84}$

$= 9.17$ (3sf)

9.17 .....cm

(Total for question 9 is 3 marks)

---

10 *ABCD* is a trapezium.

Calculate the length of *AC*.
Give your answer correct to 3 significant figures..

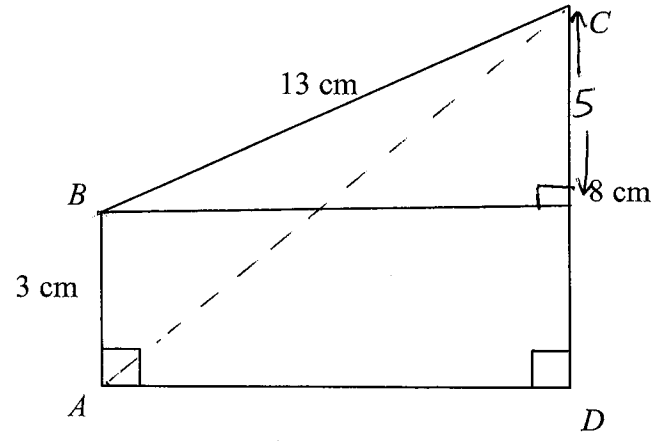

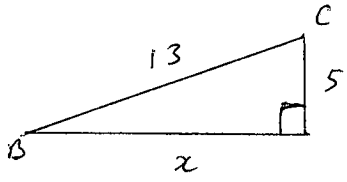

$x^2 + 5^2 = 13^2$

$x^2 = 13^2 - 5^2$

$x^2 = 144$

$x = \sqrt{144}$

$= 12$

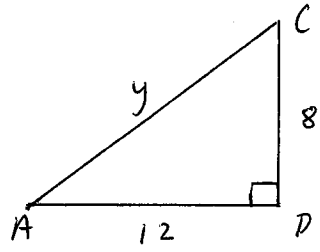

$8^2 + 12^2 = y^2$

$y^2 = 208$

$y = \sqrt{208}$

$y = 14.4$

(3sf)

14.4 .....cm

(Total for question 10 is 4 marks)

11 A ship leaves point A and sails for 3.7 km due North.
The ship then sails for 2.4 km due East to reach point B.

Calculate the the shortest distance between point A and point B.
Give your answer correct to 1 decimal place.

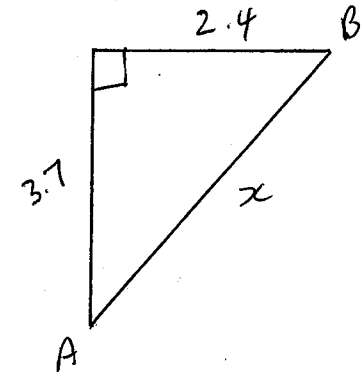

$2.4^2 + 3.7^2 = x^2$

$x^2 = 19.45$

$x = \sqrt{19.45}$

$= 4.4$ km (1dp)

4.4 km

(Total for question 11 is 3 marks)

250cm

12 A ladder reaches 2.5 m up a vertical wall.
The base of the ladder is 70 cm from the base of the wall on a horizontal ground.

Find the length of the ladder.

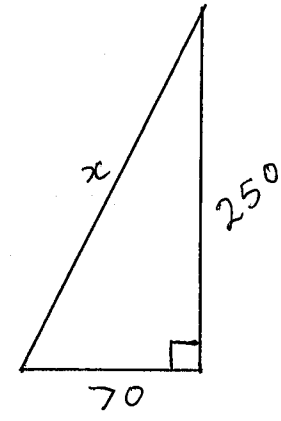

$70^2 + 250^2 = x^2$

$67400 = x^2$

$x^2 = 67400$

$x = \sqrt{67400}$

$= 259.6150997$ cm

$= 260$ cm (nearest cm)

260 cm

(Total for question 12 is 4 marks)

OR 2.6m

13 *ABCD* is a square.
The diagonal of the square is 8 m.

Calculate the perimeter of the square.
Give your answer correct to one decimal place.

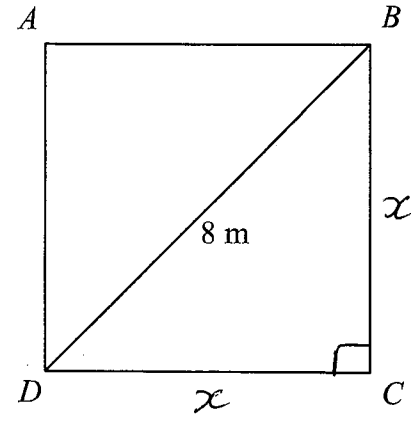

$x^2 + x^2 = 8^2$

$2x^2 = 64$

$x^2 = 32$

$x = \sqrt{32}$

$= 5.656854249$ m

$4 \times 5.656... = 22.6$ m (1dp)

.....22.6.....m

(Total for question 13 is 3 marks)

---

14 A television has a diagonal length of 50 inches.

The ratio of the length of the television to the width of the television is 4:3

Calculate the length and the width of the television.
Give your answers correct to 1 decimal place.

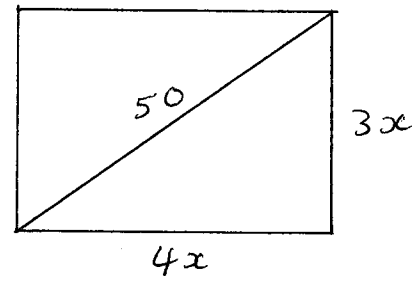

$(3x)^2 + (4x)^2 = 50^2$

$9x^2 + 16x^2 = 2500$

$25x^2 = 2500$

$x^2 = 100$

$x = 10$

$4 \times 10 = 40$

$3 \times 10 = 30$

Length .....40..... inches

Width .....30..... inches

(Total for question 14 is 3 marks)