1 The diagram shows a cuboid..

Find the total surface area of the cuboid.

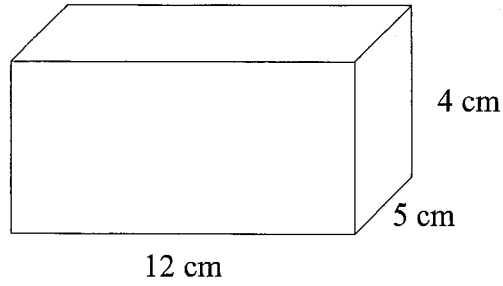

Front $12 \times 4 = 48$ cm^2

Back 48 cm^2

Top $12 \times 5 = 60$ cm^2

Bottom 60 cm^2

Side $5 \times 4 = 20$ cm^2

Side 20 cm^2

$$\begin{array}{r} 48 \\ 48 \\ 60 \\ 60 \\ 20 \\ 20 \\ \hline 256 \end{array}$$

256 cm^2

(Total for question 1 is 3 marks)

2 The diagram shows a triangular prism.

Find the total surface area of the triangular prism.

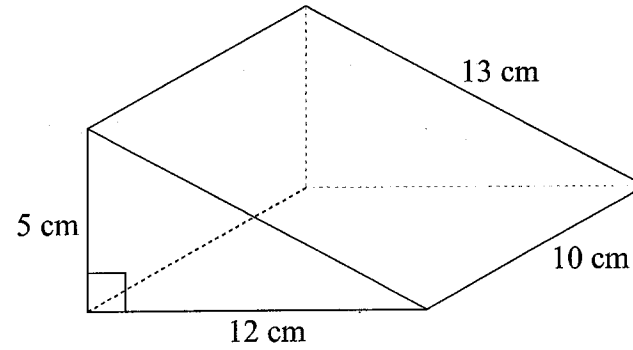

Front = $\frac{1}{2} \times 12 \times 5$ = 30 cm^2

Back = 30 cm^2

Bottom = 12×10 = 120 cm^2

Side = 5×10 = 50 cm^2

Top = 13×10 = 130 cm^2

130
120
50
30
30
360

360 cm^2

(Total for question 2 is 3 marks)

3 The diagram shows a triangular prism.

Find the total surface area of the triangular prism.

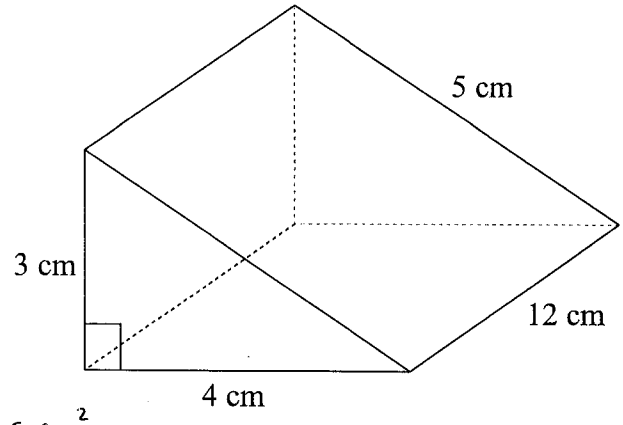

Front $= \frac{1}{2} \times 4 \times 3 = 6\ cm^2$

Back $= 6\ cm^2$

Bottom $= 4 \times 12 = 48\ cm^2$

Side $= 3 \times 12 = 36\ cm^2$

Top $= 5 \times 12 = 60\ cm^2$

$$\begin{array}{r} 60 \\ 48 \\ 36 \\ 6 \\ 6 \\ {}^{2} \\ \hline 156 \end{array}$$

156 cm^2

(Total for question 3 is 3 marks)

4 The diagram shows a prism.
The cross section of the prism is in the shape of a trapezium.

Calculate the total surface area of the prism.

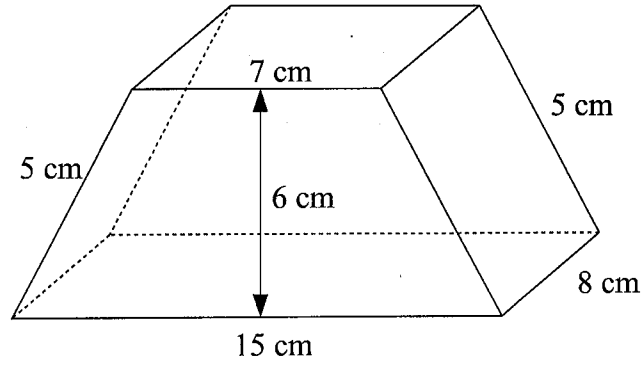

Front $= \frac{1}{2}(7 + 15) \times 6 = 66\ cm^2$

Back $= 66\ cm^2$

Side $= 5 \times 8 = 40\ cm^2$

Side $= 40\ cm^2$

Top $= 7 \times 8 = 56\ cm^2$

Bottom $= 8 \times 15 = 120\ cm^2$

```
  1 2 0
    6 6
    6 6
    5 6
    4 0
    4 0
  2 1
  3 8 8
```

388 cm^2

(Total for question 4 is 4 marks)

5 The diagram shows a prism.

Calculate the total surface area of the prism.

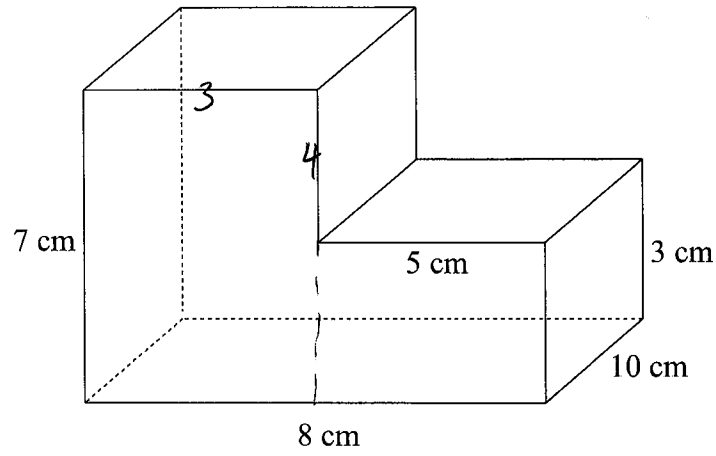

Front = 3 × 7 + 5 × 3 = 36 cm²

Back = 36 cm²

Bottom = 8 × 10 = 80 cm²

Total Top = 80 cm²

Side = 7 × 10 = 70 cm²

Total Side = 70 cm²

80
80
70
70
36
36
372

372 cm²

(Total for question 5 is 4 marks)

6 The diagram shows a box.

5 of these boxes are going to be painted.

Each pot of paint can cover 6m².

How many pots of paint are needed to paint the 5 boxes?

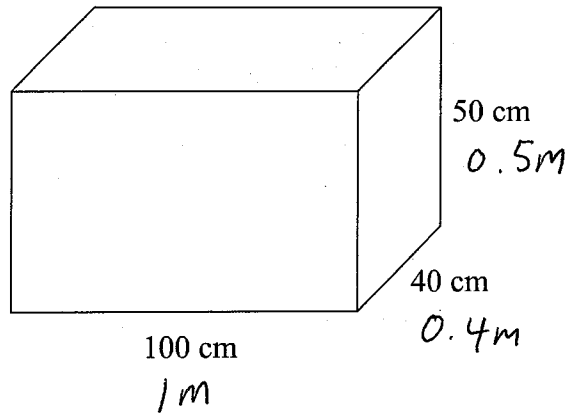

Front = 1 x 0.5 = 0.5 m²

Back = = 0.5 m²

Side = 0.4 x 0.5 = 0.2 m²

Side = 0.2 m²

Top = 1 x 0.4 = 0.4 m²

Bottom = = 0.4 m²

0.5
0.5
0.4
0.4
0.2
0.2
2.2

2.2 m² x 5 = 11 m² in total

1 pot = 6 m²

2 pots = 12 m²

.....2.....pots

(Total for question 6 is 4 marks)

7 The diagram shows a cylindrical tank.
The tank has a top and a bottom.

4 of these tanks are going to be painted.
Each tank has a diameter of 50 cm and a height of 1.5 m.

Each pot of paint can cover 4 m².

How many pots of paint are needed to paint the 4 tanks?

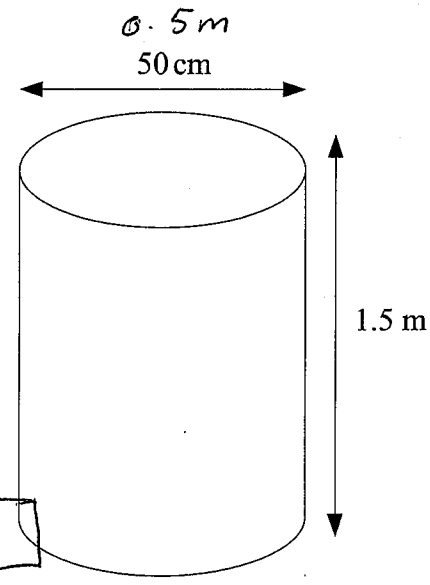

Surface area = ◯ + ◯ + ▭

Radius = 0.25m

Top = $\pi r^2 = \pi(0.25)^2$

$= \frac{\pi}{16}$ or $0.1963495...$

Bottom $= \frac{\pi}{16}$ or $0.1963495...$

Curved area = circumference × 1.5

$= \pi(0.5) \times 1.5$

$= \frac{3}{4}\pi$ or $2.35619...$

Total surface area $= \frac{1}{16}\pi + \frac{1}{16}\pi + \frac{3}{4}\pi$

$= \frac{7}{8}\pi$ or $2.74889\ m^2$

$2.74889... \times 4 = \underline{10.99\ m^2}$ [surface area of 4 tanks]

$\frac{10.99}{4} = 2.74889$ 3 pots needed

.....3.....pots

(Total for question 7 is 4 marks)