SOH ~~CAH~~ ~~TOA~~

1

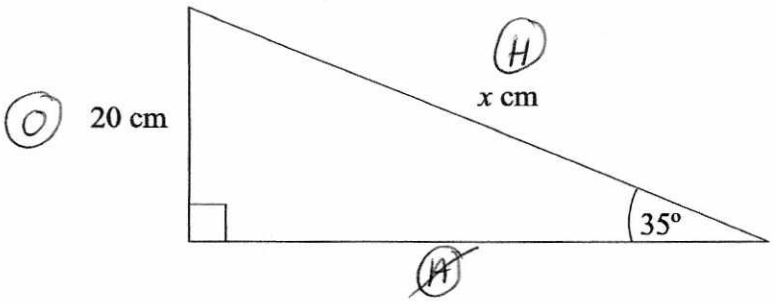

Work out the value of x.

$$\sin(35) = \frac{20}{x}$$

$$x = \frac{20}{\sin(35)}$$

$$= 34.9 \text{ (1dp)}$$

34.9

(Total for question 1 is 2 marks)

2

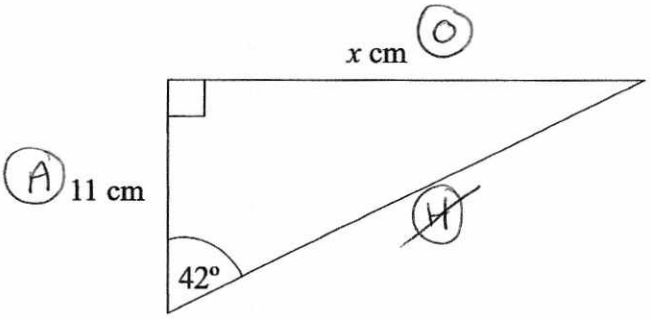

Work out the value of x.

$$\tan(42) = \frac{x}{11}$$

$$x = 11 \times \tan(42)$$

$$= 9.9 \text{ (1dp)}$$

9.9

(Total for question 2 is 2 marks)

3

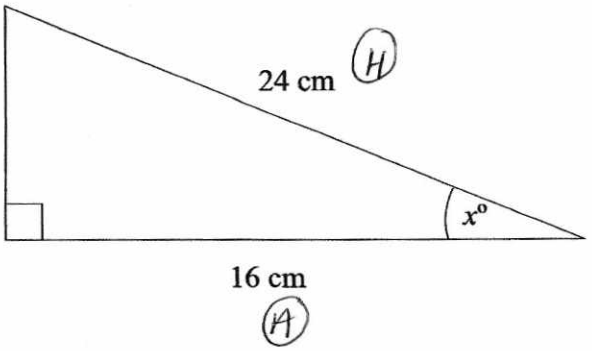

Work out the value of x.

$$\cos x = \frac{16}{24}$$

$$x = \cos^{-1}\left(\frac{16}{24}\right)$$

$$= 48.2 \text{ (1dp)}$$

48.2

(Total for question 3 is 2 marks)

4

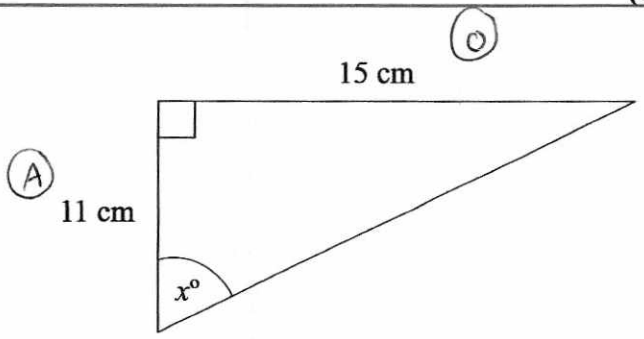

Work out the value of x.

$$\tan x = \frac{15}{11}$$

$$x = \tan^{-1}\left(\frac{15}{11}\right)$$

$$= 53.7 \text{ (1dp)}$$

53.7

(Total for question 4 is 2 marks)

5

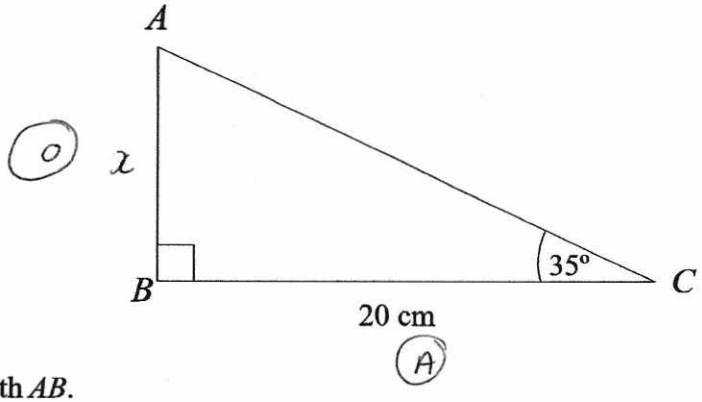

Calculate the length *AB*.

$$\tan(35) = \frac{x}{20}$$

$$x = 20 \times \tan(35)$$

$$= 14.0 \text{ (1dp)}$$

.....14.0.....cm

(Total for question 5 is 2 marks)

6

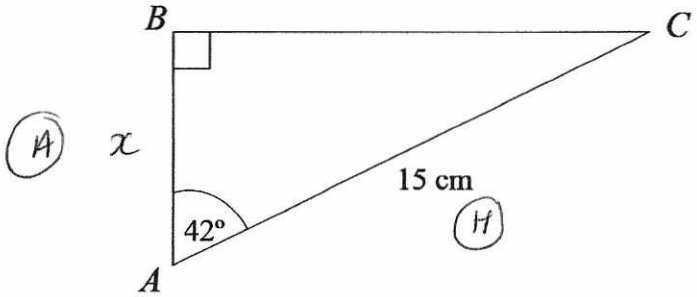

Calculate the length *AB*.

$$\cos(42) = \frac{x}{15}$$

$$x = 15 \times \cos(42)$$

$$= 11.1 \text{ (1dp)}$$

.....11.1.....cm

(Total for question 6 is 2 marks)

7

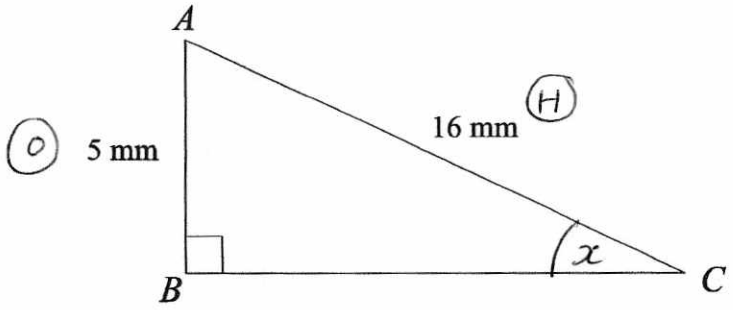

Calculate the size of angle *ACB*.

$$\sin x = \frac{5}{16}$$

$$x = \sin^{-1}\left(\frac{5}{16}\right)$$

$$= 18.2 \text{ (1dp)}$$

18.2 °

(Total for question 7 is 2 marks)

8

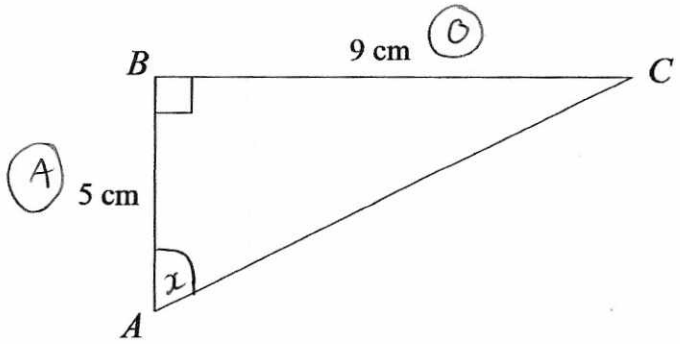

Calculate the size of angle *BAC*.

$$\tan x = \frac{9}{5}$$

$$x = \tan^{-1}\left(\frac{9}{5}\right)$$

$$= 60.9 \text{ (1dp)}$$

60.9 °

(Total for question 8 is 2 marks)

9

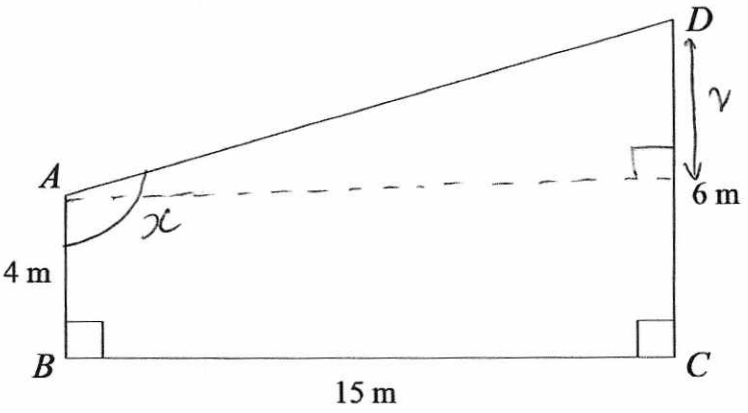

Work out the size of angle *BAD*.
Give your answer to 1 decimal place.

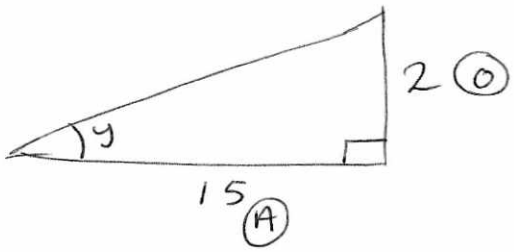

$\tan y = \frac{2}{15}$

$y = \tan^{-1}\left(\frac{2}{15}\right)$

$= 7.6^\circ$ (1dp)

$BAD = 90 + 7.6$

$= 97.6^\circ$

97.6 °

(Total for question 9 is 3 marks)

10

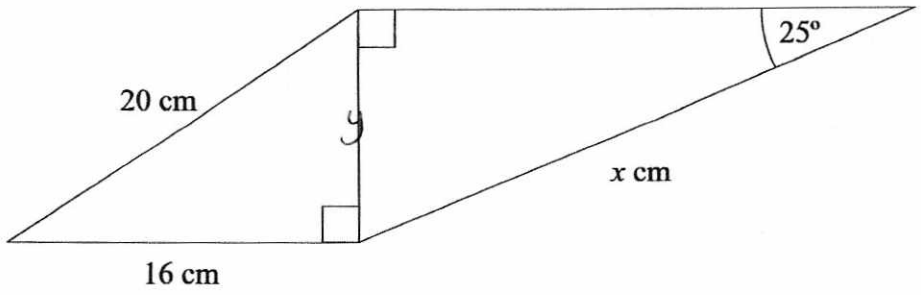

Work out the value of x.
Give your answer to 1 decimal place.

$$y^2 + 16^2 = 20^2$$
$$y^2 = 20^2 - 16^2$$
$$y^2 = 144$$
$$y = 12$$

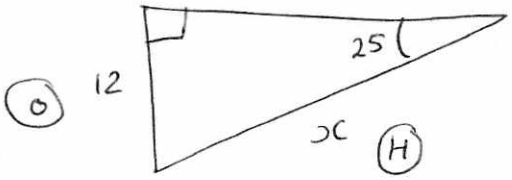

$$\sin(25) = \frac{12}{x}$$
$$x = \frac{12}{\sin(25)}$$
$$= 28.4 \text{ (1dp)}$$

28.4

(Total for question 10 is 4 marks)

11

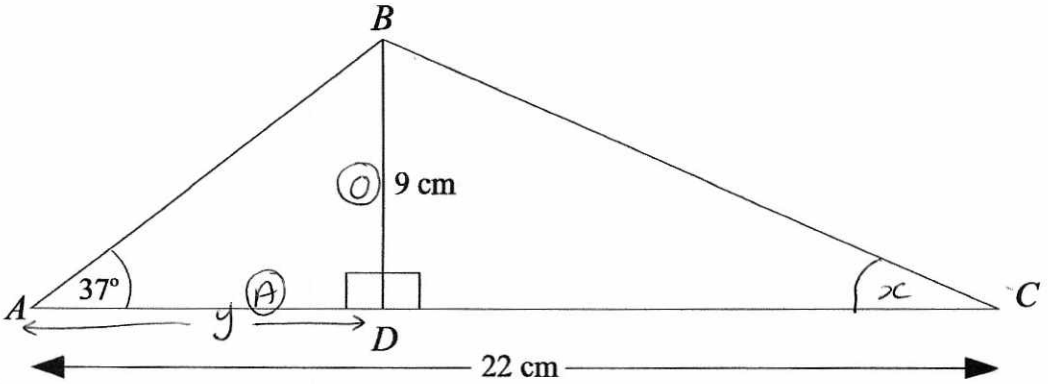

Work out the size of angle *BCD*.
Give your answer to 1 decimal place.

$$\tan(37) = \frac{9}{y}$$

$$y = \frac{9}{\tan(37)}$$

$$= 11.9434...$$

$$CD = 22 - 11.9434$$

$$= 10.05659...$$

O

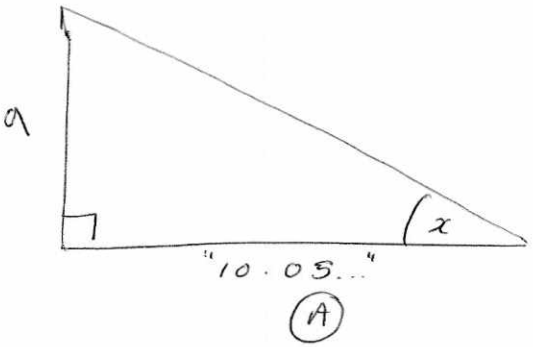

$$\tan x = \frac{9}{\text{"}10.05...\text{"}}$$

$$x = \tan^{-1}\left(\frac{9}{10.05...}\right)$$

$$= 41.8 \text{ 1dp}$$

41.8 °

(Total for question 11 is 4 marks)