1 The diagram shows a sector, centre O.
The radius of the circle is 8 cm.
The angle of the sector is 150°.

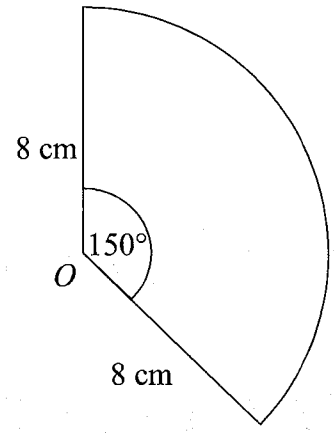

Calculate the area of the sector.
Give your answer correct to 3 significant figures.

$$\frac{150}{360} \times \pi (8)^2 = 83.8$$

83.8 ..... cm^2

(Total for Question 1 is 2 marks)

---

2 AOB is a sector of a circle, centre O and radius 18 cm.
The angle of the sector is 125°.

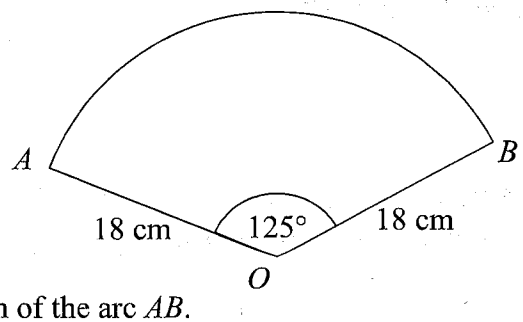

Calculate the length of the arc AB.
Give your answer in terms of π.

$$\frac{125}{360} \times 2\pi(18) = \frac{25}{2}\pi$$

$\frac{25}{2}\pi$ ..... cm

(Total for Question 2 is 2 marks)

3 The diagram shows a sector, centre O.
The radius of the circle is 15.2 cm.
The angle of the sector is 165°.

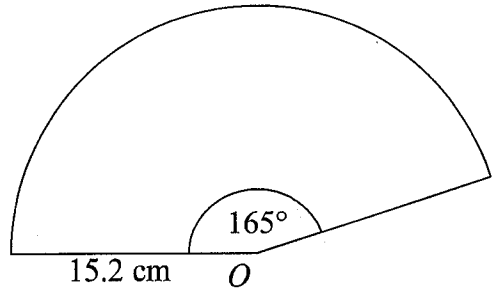

Calculate the area of the sector.
Give your answer correct to 3 significant figures.

$$\frac{165}{360} \times \pi (15.2)^2 = 333 \text{ cm}^2$$

333 cm^2

(Total for Question 3 is 3 marks)

---

4 AOB is a sector of a circle, centre O and radius 6 cm.
The angle of the sector is 60°.

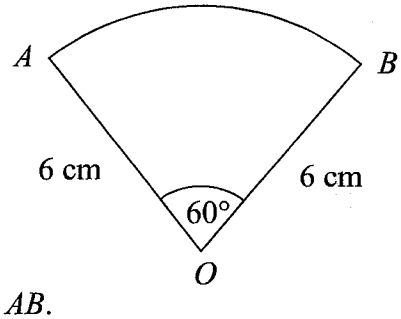

Find the length of the arc AB.
Give your answer in terms of π.

$$\frac{60}{360} \times 2\pi(6) = 2\pi$$

2π cm

(Total for Question 4 is 2 marks)

5 The diagram shows a sector, centre O.
The radius of the circle is 11 m.
The angle of the sector is 200°.

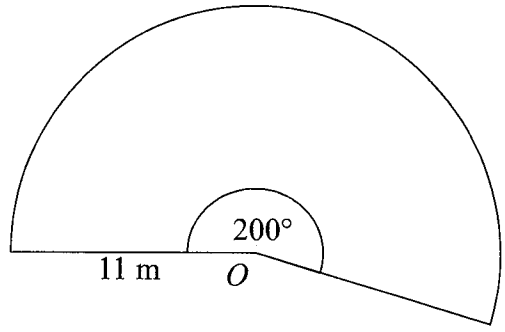

Calculate the area of the sector.
Give your answer correct to 3 significant figures.

$$\frac{200}{360} \times \pi (11)^2 = 211 \text{ m}^2$$

211 ..... m^2

(Total for Question 5 is 2 marks)

---

6 AOB is a sector of a circle, centre O and radius 5.2 cm.
The angle of the sector is 80°.

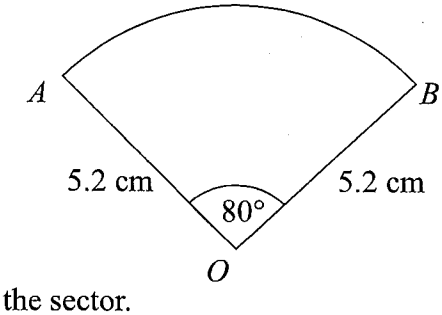

Find the **perimeter** of the sector.
Give your answer correct to 3 significant figures.

$$\text{Arc length} = \frac{80}{360} \times 2\pi(5.2)$$

$$= 7.3 \text{ cm}$$

$$\text{Perimeter} = 5.2 + 5.2 + 7.3$$

$$= 17.7 \text{ cm}$$

17.7 ..... cm

(Total for Question 6 is 3 marks)

7 *BAC* is a sector of a circle, centre *A*.
AC is the diameter of a semi circle.
AC is 10 cm.

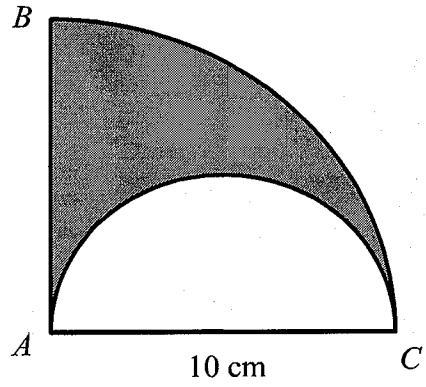

Find the area of the shaded region.
Give your answer in terms of π.

Area of ◗ $= \frac{1}{4}\pi(10)^2$

$= 25\pi$

Area of ◠ $= \frac{1}{2}\pi(5)^2$

$= 12.5\pi$

Shaded area $= 25\pi - 12.5\pi$

$= 12.5\pi$

12.5π cm^2

(Total for Question 7 is 4 marks)

8 The diagram shows a rectangle, *ABCD,* and a semi circle.
BC is the diameter of a semi circle.

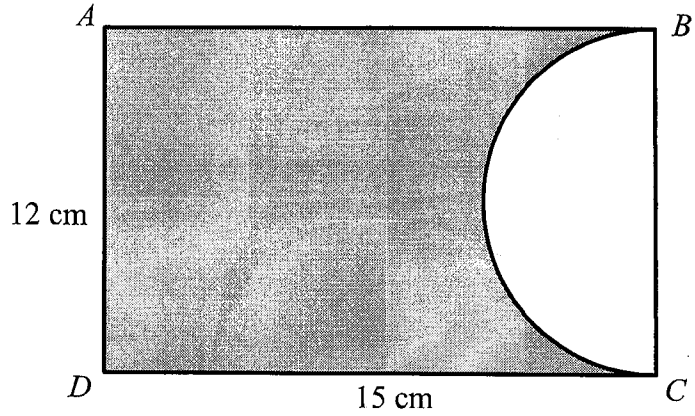

Calculate the percentage of the area of the rectangle that is shaded.
Give your answer correct to 1 decimal place.

Area of rectangle $= 12 \times 15$
$= 180 \text{ cm}^2$

Area of semi circle $= \frac{1}{2}\pi(6)^2$
$= 18\pi \text{ cm}^2$

Shaded area $= 180 - 18\pi$
$= 123.45 \text{ cm}^2$

$\frac{123.45}{180} \times 100 = 68.6\%$ 68.6 %

(Total for Question 1 is 8 marks)

9 AOB is a sector of a circle, centre O and radius 12 cm.
The length of arc AB is 15 cm.

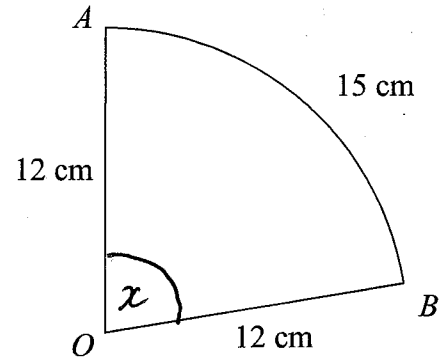

Find the area of the sector.
~~Give your answer correct to 3 significant figures.~~

$$\text{Arc length} = \frac{x}{360} \times 2\pi r$$

$$15 = \frac{x}{360} \times 2\pi(12)$$

$$5400 = x \times 24\pi$$

$$x = \frac{5400}{24\pi}$$

$$= 71.6^\circ$$

$$\frac{\text{"}71.6\text{"}}{360} \times \pi(12)^2 = 90$$

90 cm^2

(Total for Question 9 is 4 marks)

10 AOB is a sector of a circle, centre O and radius 9 cm.
The length of arc AB is 6π cm.

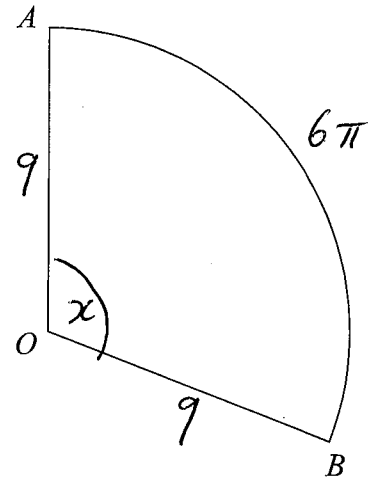

Find the area of the sector.
Give your answer in terms of π.

$$\frac{x}{360} \times 2\cancel{\pi}(9) = 6\cancel{\pi}$$

$$\frac{18x}{360} = 6$$

$$x = \frac{\cancel{6}^{1} \times 360}{\cancel{18}_{3}}$$

$$= 120^\circ$$

$$\text{Area} = \frac{120}{360} \times \pi(9)^2$$

$$= \underline{\underline{27\pi}} \text{ cm}^2$$

27π cm^2

(Total for Question 10 is 4 marks)