1 Write down the exact value of cos (60°)

$\frac{1}{2}$

(Total for Question 1 is 1 mark)

2

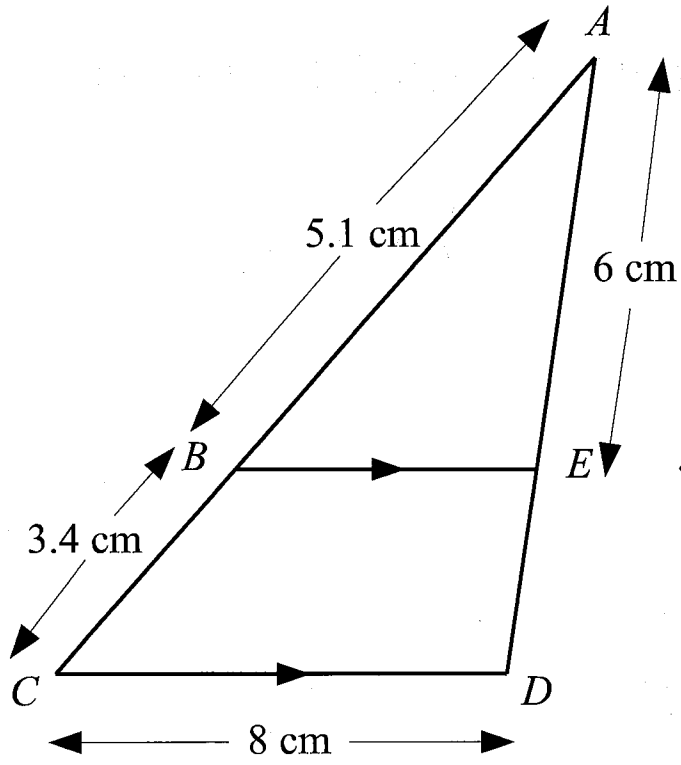

$S.F = \frac{8.5}{5.1} = \frac{5}{3}$

$\times \frac{5}{3}$

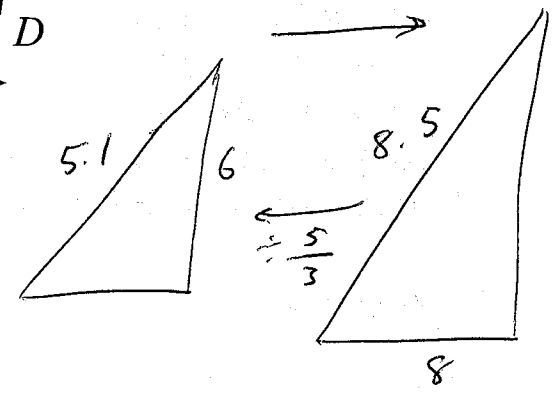

BE is parallel to *CD*.
AB = 5.1 cm, *BC* = 3.4 cm, *CD* = 8 cm, *AE* = 6 cm.

(a) Calculate the length of *ED*.

$AD = 6 \times \frac{5}{3} = 10$ cm

$10 - 6 = 4$

4 cm

(2)

(b) Calculate the length of *BE*.

$8 \div \frac{5}{3} = 4.8$

4.8 cm

(2)

(Total for Question 2 is 4 marks)

3 Andy and Bruce share some sweets in the ratio 7:3 10 PARTS
Andy gets A sweets
Bruce gets B sweets $\times 9$

Carla and David share the same amount of sweets as Andy and Bruce.
They share their sweets in the ratio 5:4. 9 PARTS

Carla gets C sweets $\times 10$
David gets D sweets

Find $A:B:C:D$

A : B C : D

63 : 27 50 : 40

63 : 27 : 50 : 40

(Total for Question 3 is 3 marks)

---

4 AOB is a sector of a circle, centre O and radius 8 cm.
The angle of the sector is 60°.

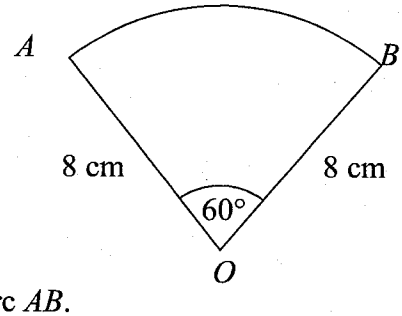

Find the length of the arc AB.
Give your answer in terms of π.

$$\frac{60}{360} \times 2\pi(8) = \frac{8}{3}\pi$$

$\frac{8}{3}\pi$ cm

(Total for Question 4 is 2 marks)

5 The graphs of the straight lines with equations $y = x + 2$ and $2x + 3y = 16$ have been drawn on the grid.

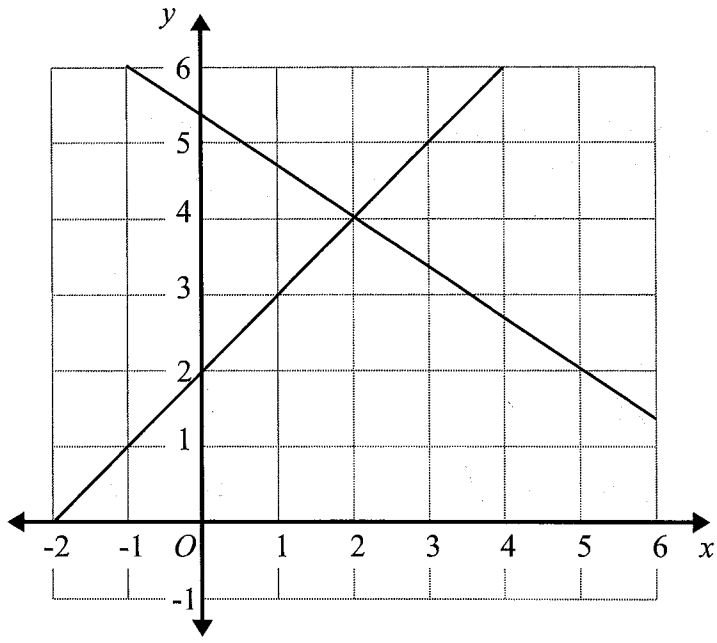

Use the graphs to solve the simultaneous equations

$$y = x + 2$$
$$2x + 3y = 16$$

$x = 2 \quad y = 4$

(Total for Question 5 is 2 marks)

---

6 Solve the simultaneous equations

$$3x - 4y = 24 \quad \times 7$$
$$7x + 2y = 39 \quad \times 3$$

$$21x - 28y = 168$$
$$21x + 6y = 117$$

$$-34y = 51$$

$$y = -\frac{3}{2}$$

$$3x - 4\left(-\frac{3}{2}\right) = 24$$

$$3x + 6 = 24$$

$$3x = 18$$

$$x = 6$$

$x = 6, \quad y = -\frac{3}{2}$

(Total for Question 6 is 3 marks)

7 The diagram shows a solid cone.

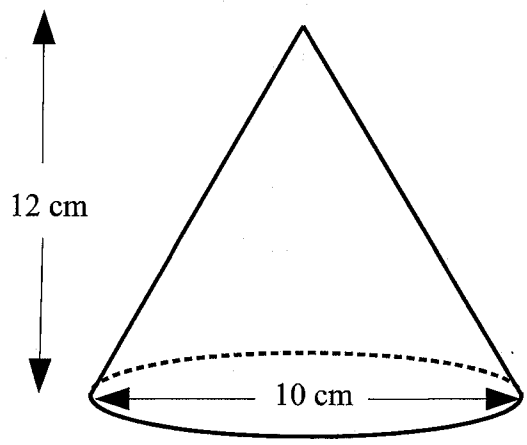

Volume of cone $= \frac{1}{3}\pi r^2 h$

Curved surface area of cone $= \pi r l$

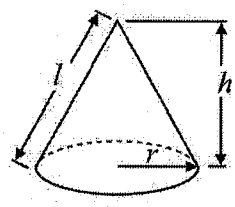

The height of the cone is 12 cm.
The base of the cone has a diameter of 10 cm. $r = 5$

Work out the total surface area of the cone.
Give your answer in terms of π.

Area of circle $= \pi (5)^2$

$= \underline{\underline{25\pi}}$

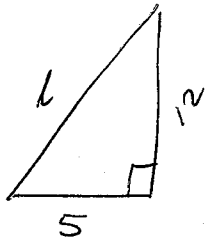

$5^2 + 12^2 = l^2$

$169 = l^2$

$l = \sqrt{169}$

$= 13$

Curved s.a $= \pi (5)(13)$

$= \underline{\underline{65\pi}}$

$25\pi + 65\pi$ $\quad$ 90π cm^2

(Total for Question 7 is 5 marks)

8

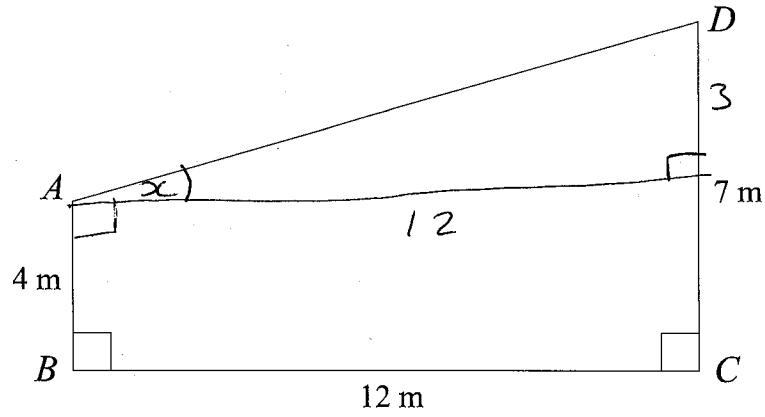

Work out the size of angle *BAD*.
Give your answer to 1 decimal place.

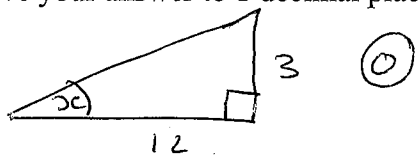

O

A

$\tan x = \frac{3}{12}$

$x = \tan^{-1}\left(\frac{3}{12}\right)$

$= 14.0°$

$90 + 14.0 = 104.0°$

104.0 °

(Total for Question 8 is 3 marks)

---

9 It takes 3 builders 8 days to complete a job.

Work out how many days it would take 4 builders to complete the same job.

$3 \times 8 = 24$ days of work

$\frac{24}{4} = 6$ days

6

(Total for Question 9 is 2 marks)