1 (a) Write $x^2 - 8x + 3$ in the form $(x + a)^2 + b$ where a and b are integers.

$(x-4)^2 - 16 + 3$

$(x-4)^2 - 13$

$(x-4)^2 - 13$

(2)

(b) Hence, or otherwise, write down the coordinates of the turning point of the graph of $y = x^2 - 8x + 3$

$(4, -13)$

(1)

(Total for Question 1 is 3 marks)

---

2 n is an integer.
Prove algebraically that the sum of $(n + 3)(n + 2)$ and $n + 3$ is always a square number.

$(n+3)(n+2) + n + 3$

$n^2 + 2n + 3n + 6 + n + 3$

$n^2 + 6n + 9$

$(n+3)(n+3)$

$(n+3)^2$

(Total for Question 2 is 3 marks)

3 Sketch the graph of $y = \cos x°$ for $0 \leq x \leq 360$

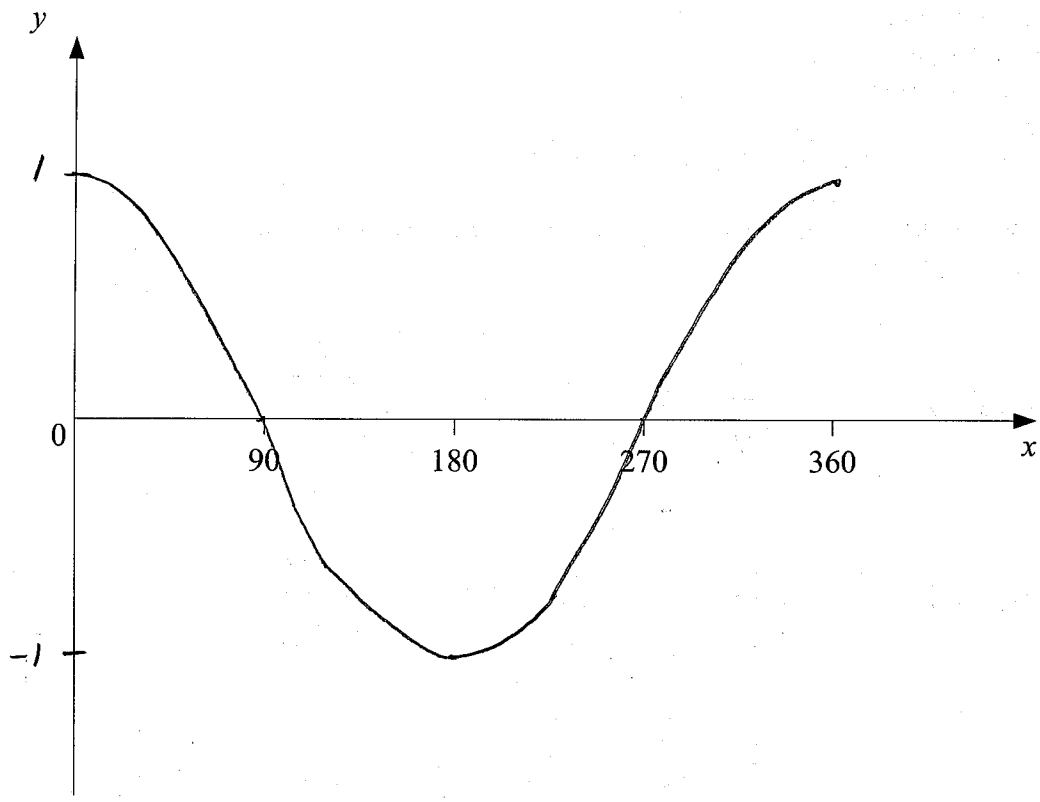

(Total for Question 3 is 3 marks)

---

4 Write $\dfrac{x^2 - x - 30}{3x^2 + 13x - 10}$ in the form $\dfrac{x + a}{bx + c}$ where a, b, and c are integers.

$$\frac{(x-6)\cancel{(x+5)}}{(3x-2)\cancel{(x+5)}}$$

$$\frac{x-6}{3x-2}$$

(Total for Question 4 is 3 marks)

5 There are 14 counters in a bag.

6 of the counters are red.
5 of the counters are blue.
3 of the counters are green.

Billie takes two counters are taken at random from the bag.

Work out the probability that the counters Billie takes are different colours.
You must show your working.

$$P(R,R) = \frac{6}{14} \times \frac{5}{13} = \frac{30}{182}$$

$$P(B,B) = \frac{5}{14} \times \frac{4}{13} = \frac{20}{182}$$

$$P(G,G) = \frac{3}{14} \times \frac{2}{13} = \frac{6}{182}$$

$$P(\text{Same Colour}) = \frac{30}{182} + \frac{20}{182} + \frac{6}{182} = \frac{56}{182}$$

$$P(\text{Different Colours}) = 1 - \frac{56}{182} = \frac{126}{182}$$

$\frac{126}{182}$

(Total for Question 5 is 4 marks)

or $\frac{9}{13}$

6 The diagram shows a cuboid *ABCDEFGH*.

$AB = 6$ cm
$AE = 5$ cm
$AG = 15$ cm

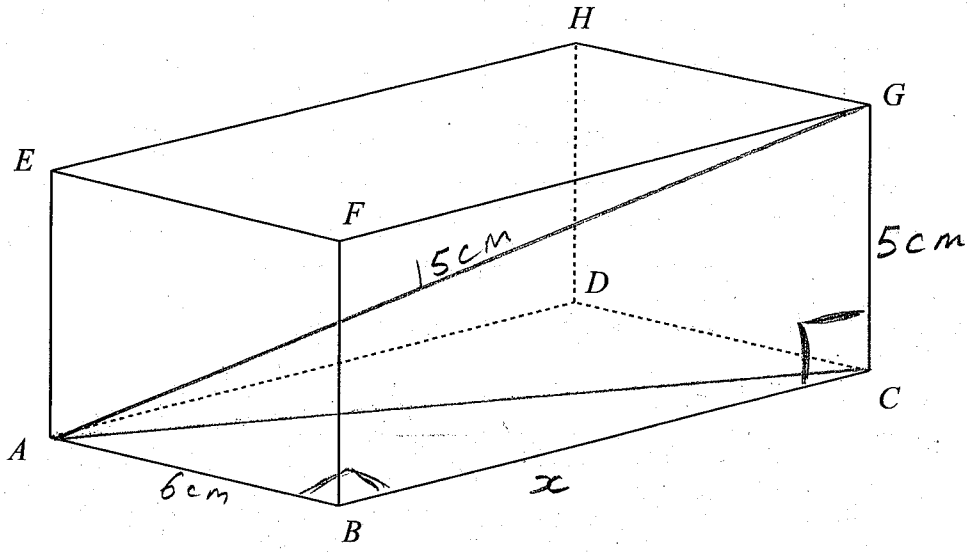

Calculate the length of *AD*.
Give your answer correct to 3 significant figures.

$AC^2 + CG^2 = AG^2$

$AC^2 + 5^2 = 15^2$

$AC^2 = 15^2 - 5^2$

$AC^2 = 200$

$AC = 10\sqrt{2}$

$x^2 + 6^2 = (10\sqrt{2})^2$

$x^2 = 200 - 6^2$

$x = \sqrt{164}$

$= 12.8$ cm

12.8 cm

(Total for Question 6 is 4 marks)

7 The table shows information about the weight of 100 pigs.

Weight (kg)	Frequency	F.d
$60 < w \leqslant 75$	12	0.8
$75 < w \leqslant 85$	33	3.3
$85 < w \leqslant 90$	25	5
$90 < w \leqslant 110$	30	1.5

(a) On the grid, draw a histogram for the information in the table.

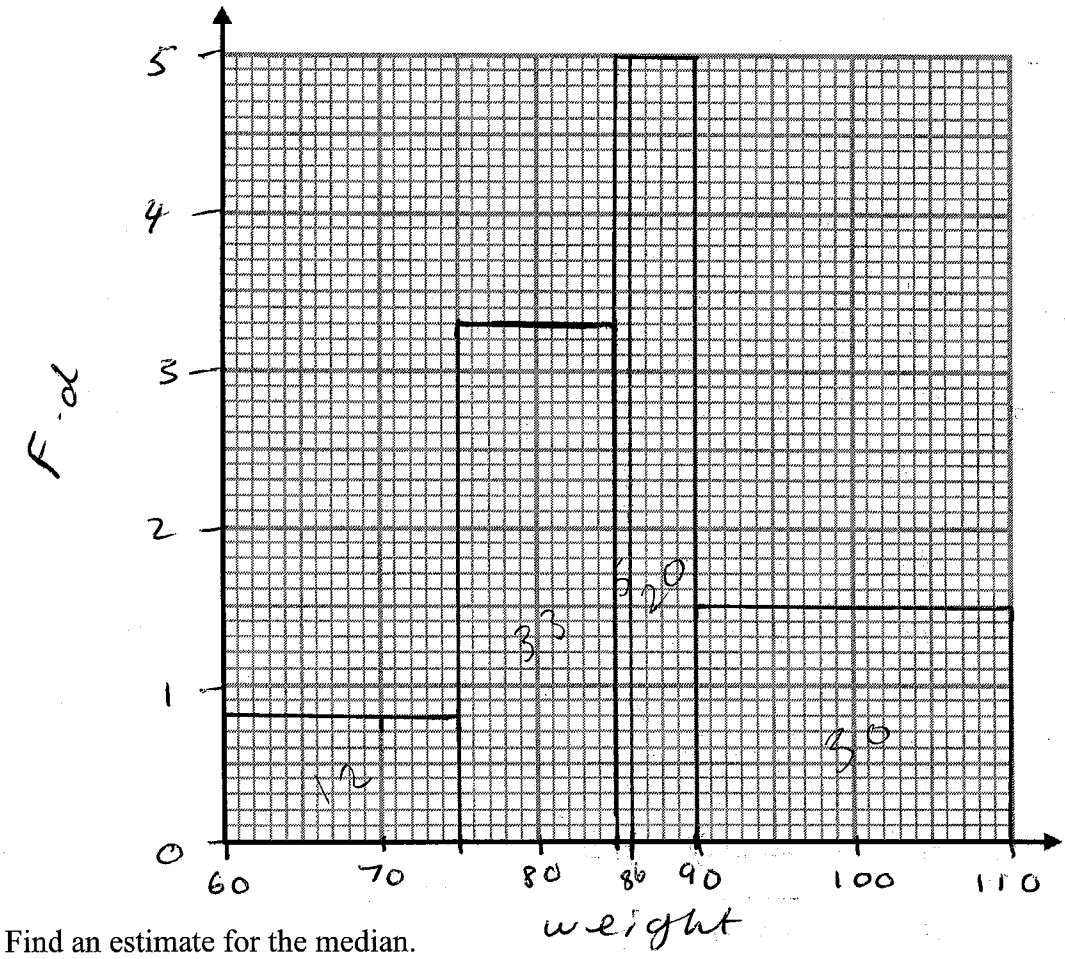

(3)

(b) Find an estimate for the median.

86 kg

(2)

(Total for Question 7 is 5 marks)

8

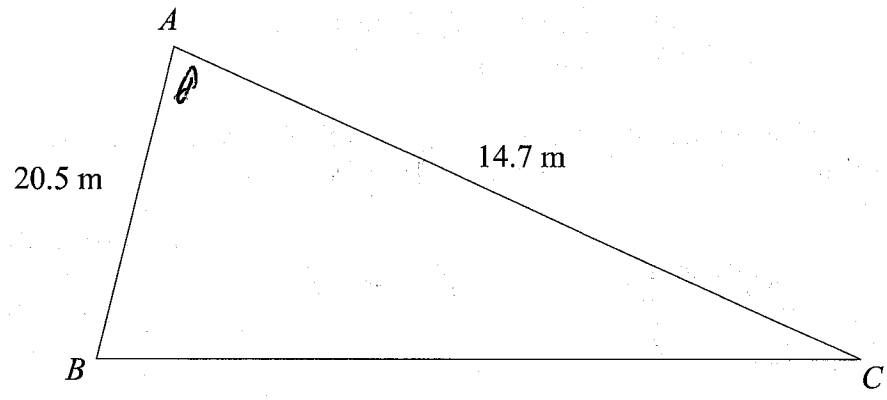

The area of the triangle is 100m^2
Calculate the perimeter of triangle *ABC*.
Give your answer to 3 significant figures.

$$\text{Area} = \frac{1}{2}ab\sin C$$

$$\frac{1}{2}(20.5)(14.7)\sin\theta = 100$$

$$\sin\theta = \frac{100}{\frac{1}{2}(20.5)(14.7)}$$

$$\theta = \sin^{-1}\left(\frac{4000}{6027}\right)$$

$$= 41.58114^\circ$$

$$a^2 = b^2 + c^2 - 2bc\cos A$$

$$= (20.5)^2 + (14.7)^2 - 2(20.5)(14.7)\cos(41.58)$$

$$= 185.5$$

$$a = \sqrt{185.5}$$

$$= \underline{\underline{13.6\text{ m}}}$$

.....13.6.....m

(Total for Question 8 is 5 marks)

9 $P = \dfrac{E}{t}$ $E = 926$ correct to 3 significant figures
$t = 8.5$ correct to 1 decimal place

By considering bounds, work out the value of P to a suitable degree of accuracy.
Give a reason for your answer.

$$\text{upper } P = \frac{\text{upper } E}{\text{lower } t} \qquad \text{lower } P = \frac{\text{lower } E}{\text{upper } t}$$

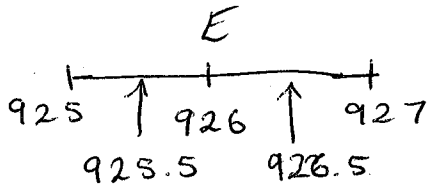

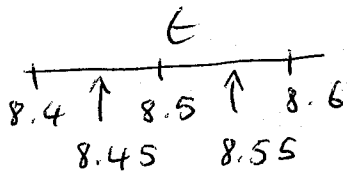

$$\text{upper } P = \frac{926.5}{8.45} \qquad \text{lower } P = \frac{925.5}{8.55}$$

$$= 109.6449\ldots \qquad = 108.2456\ldots$$

$$P = 110 \text{ (2sf)}$$

Both the upper bound and lower bound round to 110 to 2sf

(Total for Question 9 is 5 marks)