Practice Questions

Q1.

Fill in a **negative** number to make the inequality correct.

$-3 < \boxed{}$

[1 mark]

Q2.

Look at the diagram.

It shows how to change metres into centimetres and millimetres.

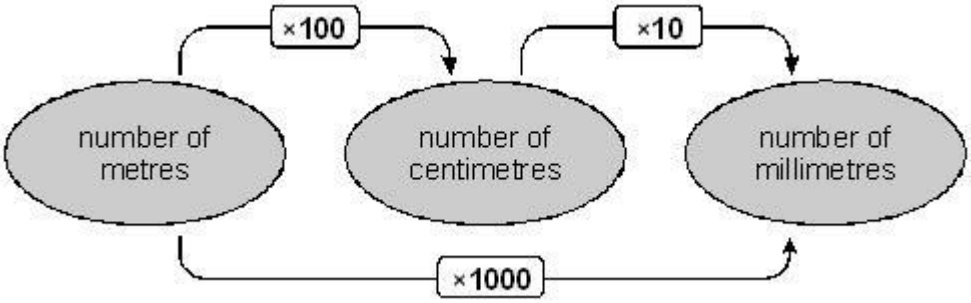

(a) Change **5 metres** into centimetres.

Answer _____ centimetres

[1 mark]

(b) Change **9 centimetres** into millimetres.

Answer _____ millimetres

[1 mark]

(c) Change **8000 millimetres** into metres.

Answer _____ metres

[1 mark]

Q3.

n is an integer.

$$5 < 2n \leq 20$$

Write down all the possible values of n.

_____

_____

_____

Answer _____

[3 marks]

Q4.

Work out 8.3 × 6

_____

_____

_____

_____

Answer _____

[2 marks]

Q5.

(a) Factorise $10x - 15$

Answer _____

[1 mark]

(b) Factorise $x^2 + 8x$

Answer _____

[1 mark]

Q6.

Work out

$$\frac{1}{4} + \frac{1}{3} =$$

$$\frac{3}{5} - \frac{1}{15} =$$

[3 marks]

Q7. CALCULATOR ALLOWED

The cuboid container below holds **12 litres** of water when full.

One litre is 1000 cm^3

The inside length and width of the cuboid are **40 cm** and **20 cm**.

What is the inside **height** of the cuboid?

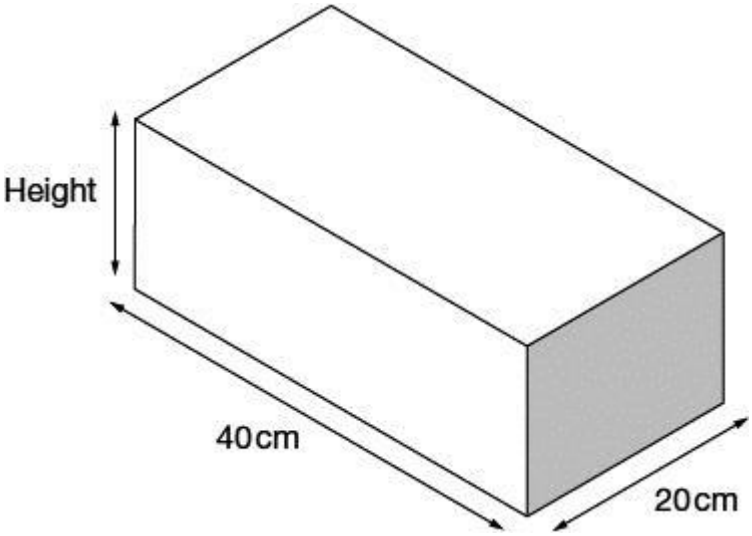

Not drawn accurately

_____

_____

_____

_____

Height = _____ cm

[2 marks]

Q8.

In a quiz, Ravi answered **24** out of **40** questions correctly.

What **percentage** of the questions did he answer correctly?

_____

_____

Answer _____%

[1 mark]

Q9.

Here is part of a newspaper report about wildlife in a country in Africa.

> The number of gorillas has **fallen by 70%** in the last ten years.
> Only about **5000 gorillas** are left.

About how many gorillas were there in this country ten years earlier?

_____

_____

_____

_____

Answer _____

[2 marks]

Q10.

Work out $8\frac{1}{6} - 2\frac{3}{5}$

Give your answer as a mixed number.

_____

_____

_____

_____

_____

_____

Answer _____

[3 marks]

Q11.

The diagram shows a kite.

The side lengths are in centimetres.

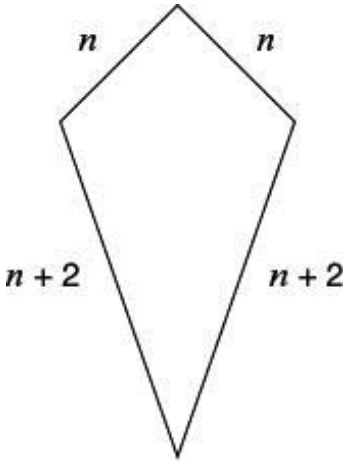

Not drawn accurately

(a) When $\boldsymbol{n} = \mathbf{9}$, what is the perimeter of the kite?

_____

_____

Answer _____ cm

[1 mark]

(b) When the perimeter of the kite is **100 cm**, what is the value of n?

_____

_____

_____

_____

n = _____

[2 marks]

Q12.

Write numbers in the boxes so that the fractions are in size order.

$$\frac{1}{4} \qquad \frac{\square}{7} \qquad \frac{1}{\square} \qquad \frac{3}{5} \qquad \frac{2}{\square}$$

[2 marks]

Q13.

(a) Look at this information about recycling:

25 large plastic bottles can be recycled to make **1** fleece jacket.

Write the missing number in this sentence.

200 large plastic bottles can be recycled to make _____ fleece jackets.

[1 mark]

(b) In a survey, **9 out of 10** people said they would like to recycle more.

What percentage of people said they would like to recycle more?

_____

_____

Answer _____ %

[1 mark]

Q14. CALCULATOR ALLOWED

A meal in a restaurant costs the same for each person.

For **11** people the total cost is **£253**

What is the total cost for 12 people?

_____

_____

_____

_____

£ _____

[2 marks]

Q15.

Simplify the ratio 18 : 15

_____

_____

Answer _____

[1 mark]

Q16.

(a) Write the missing numbers in the sentences below.

2735 rounded to the **nearest hundred** is _____

[1 mark]

2735 rounded to the **nearest thousand** is _____

[1 mark]

(b) Give an example of what the missing number could be in the sentence below.

_____ rounded to the **nearest ten** is **800**

[1 mark]

Q17.

(a) Use **£1 = 9.60 francs** to work out how much **45p** is in francs.

You **must** show your working.

_____

_____

_____

45p = _____ francs

[2 marks]

(b) Use **240 pesetas = £1** to work out how much **408 pesetas** is in pounds.

You **must** show your working.

_____

_____

_____

408 pesetas = £ _____

[2 marks]

(c) Use £1 = 9.60 francs and £1 = 240 pesetas to work out how much **1 franc** is in **pesetas**.

You **must** show your working.

_____

_____

_____

1 franc = _____ pesetas

[2 marks]

Q18.

Work out the values of m and n

$$5^8 \times 5^4 = 5^m$$

_____

_____

m = _____

[1 mark]

$$\frac{5^8}{5^4} = 5^n$$

_____

_____

n = _____

[1 mark]

Q19. CALCULATOR ALLOWED

The price of a coat is £65

In a sale the price is **reduced** by **15%**

What is the sale price of the coat?

_____

_____

_____

_____

£ _____

[2 marks]

Q20.

P and *Q* are vertices of a regular polygon.

The exterior angle at *Q* is 30°

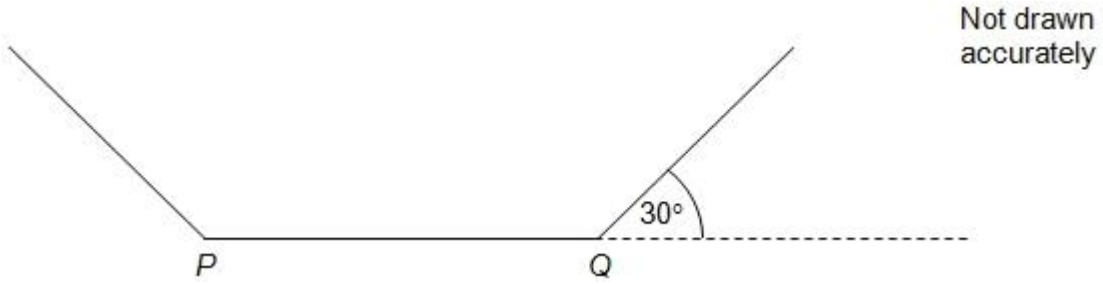

How many sides does the polygon have?

_____

_____

_____

Answer _____

[2 marks]

Q21.

70 written as the product of prime factors is $2 \times 5 \times 7$

(a) Write 84 as the product of prime factors.

_____

_____

_____

_____

Answer _____

[2 marks]

(b) Work out the highest common factor (HCF) of 84 and 70

_____

Answer _____

[1 mark]

(c) Work out the least common multiple (LCM) of 84 and 70

_____

Answer _____

[1 mark]

Q22.

Which is bigger? 2^3 or $\sqrt{65}$

Give a reason for your answer.

_____

_____

_____

_____

[2 marks]

Q23.

Round these numbers to one decimal place.

One has been done for you.

Number	To nearest one decimal place
12.72	12.7
10.16	
672.09	
24.81	

[2 marks]

Q24.

(a) Share £35 in the ratio 4 : 1

_____

_____

_____

_____

£ _____ : £ _____

[2 marks]

(b) Two friends share some money in the ratio 7 : 2

What fraction of the money does the first friend receive?

Answer _____

[1 mark]

(c) Harry and Sunil each have the same amount of money.

Harry wants Sunil to have £5 more than him.

How much should he give to Sunil?

_____

_____

£_____

[1 mark]

Q25.

Here is an equation.

$$x^y = 64$$

Give four **different** pairs of values that satisfy this equation.

First pair	x = _____	y = _____
Second pair	x = _____	y = _____
Third pair	x = _____	y = _____
Fourth pair	x = _____	y = _____

[3 marks]

Q26.

Dan says:

*'All **factors of 70** are even numbers.'*

Is he correct?

Tick (✓) Yes or No.

☐ Yes ☐ No

Explain your answer.

_____

_____

[1 mark]

Q27.

(a) The diagram shows a **rhombus**.

One angle is 46°

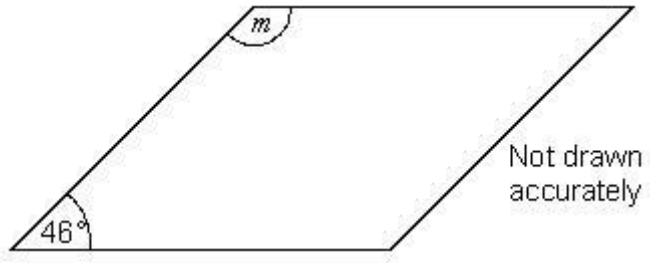

Calculate the size of the angle marked m

You **must** show your working.

_____

_____

_____

Answer _____ °

[2 marks]

Q28.

Multiply out these expressions.

Write your answers as simply as possible.

$5(x + 2) + 3(7 + x)$

_____

_____

_____

[2 marks]

$(x + 2)(x + 5)$

_____

_____

_____

[2 marks]

Q29.

Solve this equation.

$$\frac{2n + 5}{3} = 11$$

_____

_____

_____

_____

n = _____

[2 marks]

Q30. CALCULATOR ALLOWED

This door wedge is the shape of a prism.

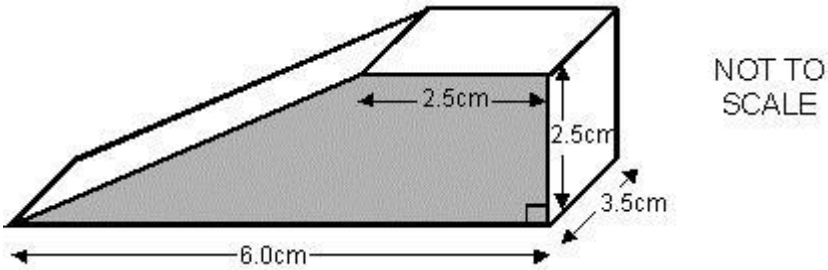

(a) The shaded face of the door wedge is a trapezium.

Calculate the area of the shaded face.

You **must** show your working.

_____

_____

_____

_____

Answer _____ cm^2

[2 marks]

(b) Calculate the volume of the door wedge.

You **must** show your working.

_____

_____

Answer _____ cm^3

[1 mark]

Q31.

The triangle lies between two parallel lines.

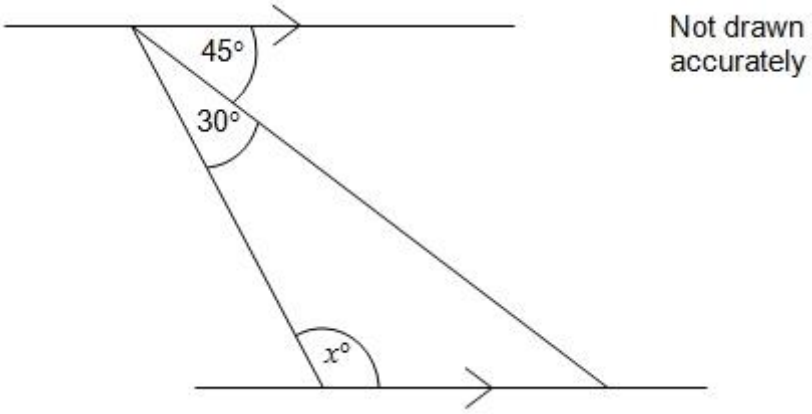

Work out the value of x.

_____

_____

_____

Answer _____ degrees

[2 marks]

Q32.

Calculate **57.3 × 2.1**

You **must** show your working.

_____

_____

_____

_____

Answer _____

[2 marks]

Q33.

(a) The square and the rectangle below have the **same area**.

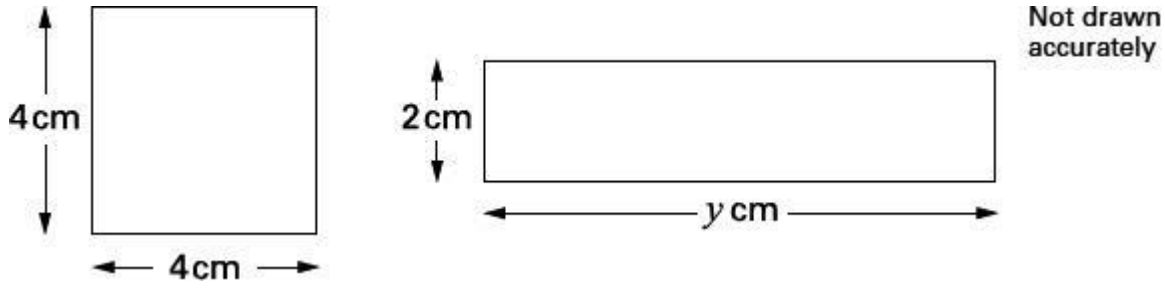

Work out the value of y

y = _____ cm

[1 mark]

(b) The triangle and the rectangle below have the **same area**.

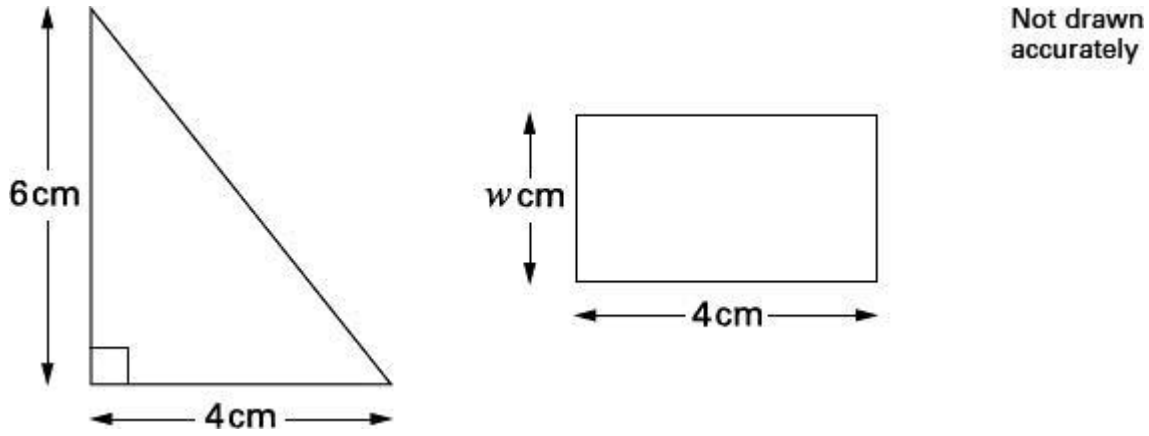

Work out the value of w

You **must** show your working.

w = _____ cm

[2 marks]

Q34. CALCULATOR ALLOWED

The diagram shows parts of two circles, sector A and sector B

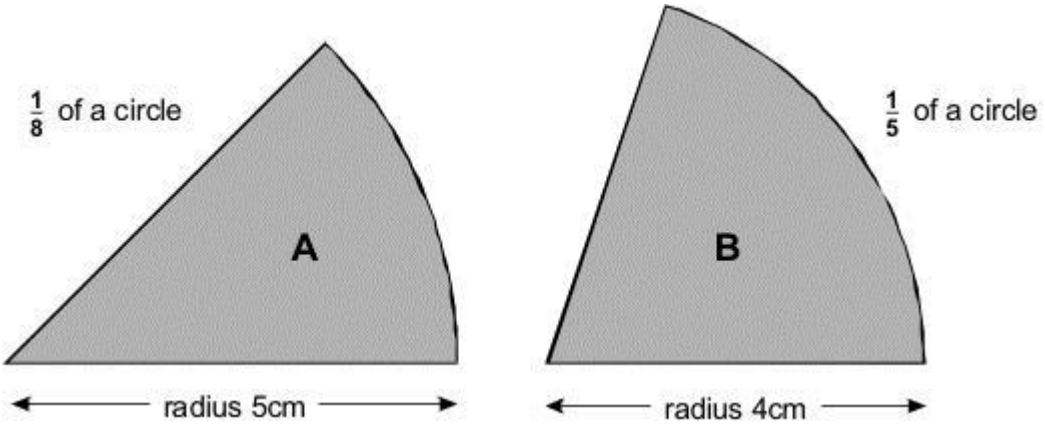

(a) Which sector has the **bigger area**?

You **must** show your working to explain your answer.

_____

_____

_____

_____

[2 marks]

(b) The perimeter of a sector is made from two straight lines and an arc.

Which sector has the **bigger perimeter**?

You **must** show your working to explain your answer.

_____

_____

_____

_____

[2 marks]

Q35.

(a) Factorise $x^2 + 7x + 10$

_____

_____

Answer _____

[1 mark]

(b) Factorise $x^2 - 25$

_____

_____

Answer _____

[1 mark]

Q36. CALCULATOR ALLOWED

The diagram shows a plan of Luke's new lawn.

The lawn is a circle with radius 3 m.

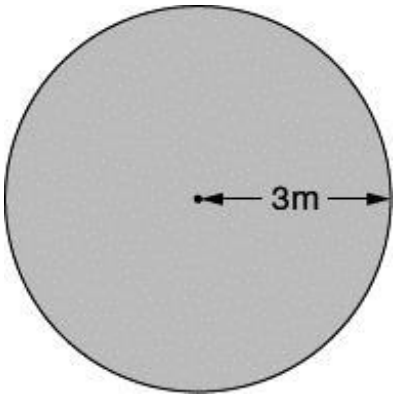

Work out the area of the lawn.

_____

_____

_____

_____

Answer _____ m^2

[2 marks]

Q37. CALCULATOR ALLOWED

Look at this triangle.

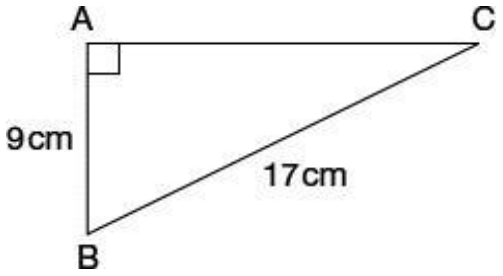

Not drawn accurately

Work out length AC.

_____

_____

_____

_____

AC = _____ cm

[2 marks]