1 Write a number in each box to make the calculation correct.

(i) $\boxed{36} + 7 = 43$ (1)

(ii) $51 = 84 - \boxed{33}$ (1)

(Total for Question 1 is 2 marks)

---

2 $H = f - 2g$

Work out the value of H when $f = 15$ and $g = -4$

1 mark for correct substitution/method

$H = 15 - 2(-4)$

$= 23$

23

(Total for Question 2 is 2 marks)

3

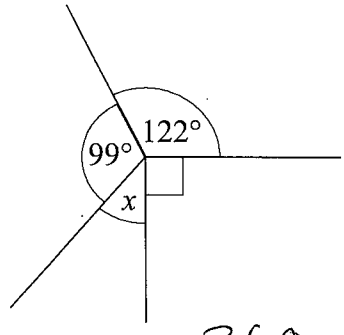

360 − 122 − 99 − 90

(a) Work out the size of the angle marked x.

49 °

(b) Give a reason for your answer.

Angles around a point add to 360°

(Total for Question 3 is 2 marks)

2600 g

4 A shop sells washing powder in 2.6 kg packs.

Jacob has no washing powder.
He estimates that he does 2 washes a week, using 80g each wash.

Jacob wants to buy enough washing powder for 52 weeks.

How many packs of washing powder does Jacob need to buy?

2 × 80 = 160g

160 × 52 = 8320g 1 mark for 8320g

1 mark for 8.32/2.6 or 8320/2600 or 3.2

$\frac{8320}{2600} = 3.2$ (4 PACKS)

4

For no working/incorrect working 0 marks

(Total for Question 4 is 3 marks)

---

5 Write 0.11 as a fraction.

$\frac{11}{100}$

(Total for Question 5 is 1 mark)

---

6 Write 0.9 as a percentage.

90 %

(Total for Question 6 is 1 mark)

---

7 (a) Find the value of $9.5^2 + 2.5^2$

96.5

(1)

(b) Find the value of $\sqrt{9.8 + 13.56} - 2.17$

1 mark for 4.8332...

2.663218389

(2)

(Total for Question 7 is 3 marks)

8 The diagram shows two shapes on a centimetre grid.

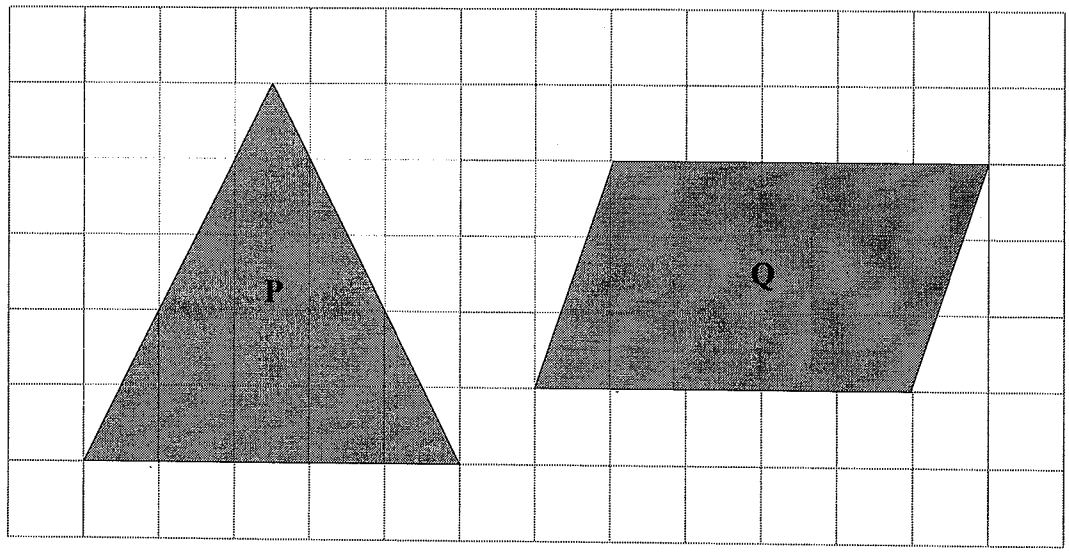

(a) Find the area of shape **P**

$\frac{1}{2} \times 5 \times 5$

12.5 cm^2

(b) Write down the mathematical name for shape **Q**.

parallelogram

(c) Find the area of shape **Q**.

5×3

15 cm^2

(Total for Question 8 is 3 marks)

9 Here are the heights, in cm, of 18 people.

155 174 171 194 153 157 173 186 155

179 169 180 153 152 181 193 175 184

Draw an ordered stem and leaf diagram to show this information.

1 mark for just one error

15	2 3 3 5 5 7
16	9
17	1 3 4 5 9
18	0 1 4 6
19	3 4

Key: 15 | 2 = 156 cm

(Total for Question 9 is 2 marks)

10 Here is a list of seven numbers.
One of the numbers is hidden.

7	8	11	13	9	15	?

The mean of the numbers is 12.

Find the value of the hidden number.

1 mark for 84

7 x 12 = 84 (The numbers add to 84)

7 + 8 + 11 + 13 + 9 + 15 = 63

84 − 63

21

(Total for Question 10 is 2 marks)

11 20 students in each of year 7 and year 8 were asked how about their favourite biscuits.

The table gives information about the results.

	Digestive	**Custard Cream**	**Shortbread**
Year 7	5	7	8
Year 8	3	8	9

Draw a suitable bar chart for this information.

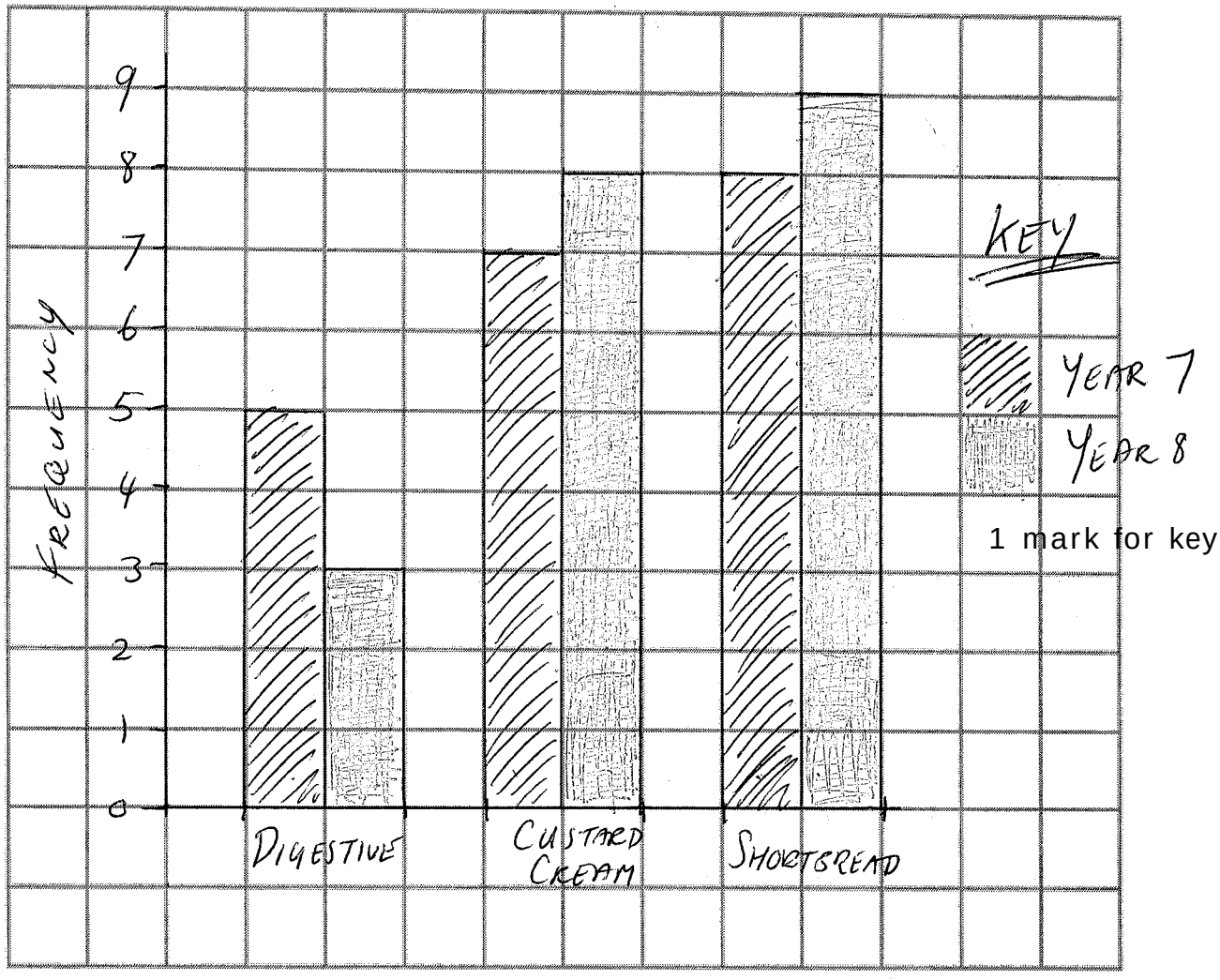

1 mark for key

1 mark for correct scales and labels

1 mark for correct heights of all bars

(Total for Question 11 is 4 marks)