| REV. | ECN.NO. | MODIFY.CONTENT | DATE |
|---|---|---|---|
| A | | NEW RELEASE | 04/28/17 |

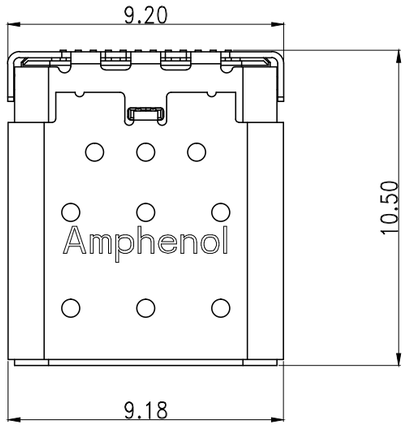


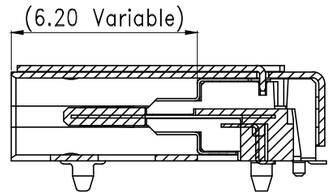


SECTION H-H

| Pin No | Signal Name | Mating Sequence | Pin No | Signal Name | Mating Sequence |
|---|---|---|---|---|---|
| A1 | GND | First | B12 | GND | First |
| A2 | TX1+ | Second | B11 | RX1+ | Second |
| A3 | TX1− | Second | B10 | RX1− | Second |
| A4 | VBUS | First | B9 | VBUS | First |
| A5 | CC1 | Second | B8 | SBU2 | Second |
| A6 | D+ | Second | B7 | D− | Second |
| A7 | D− | Second | B6 | D+ | Second |
| A8 | SBU1 | Second | B5 | CC2 | Second |
| A9 | VBUS | First | B4 | VBUS | First |
| A10 | RX2− | Second | B3 | TX2− | Second |
| A11 | RX2+ | Second | B2 | TX2+ | Second |
| A12 | GND | First | B1 | GND | First |
| SHELL | | GND | SHELL | | GND |

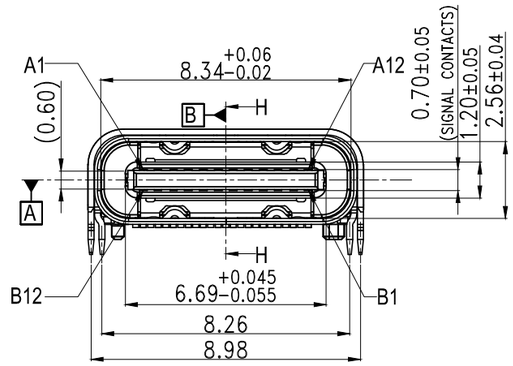


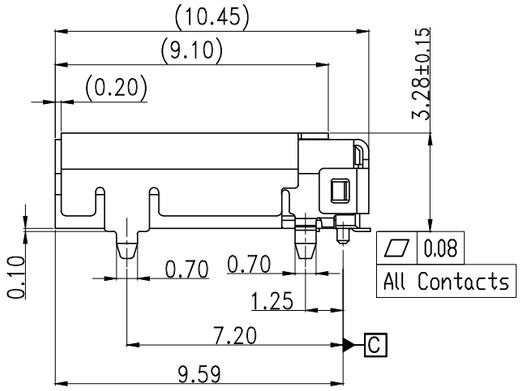


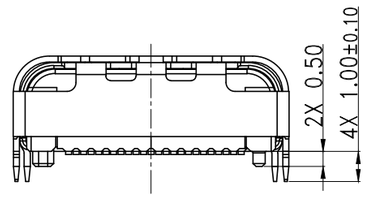


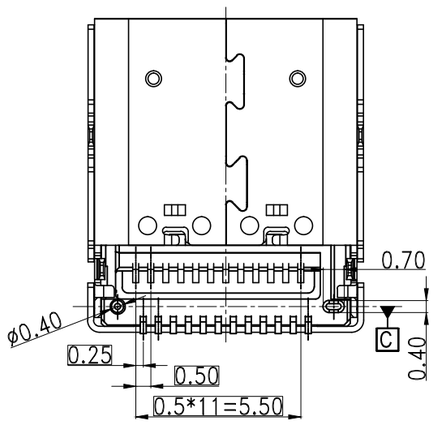


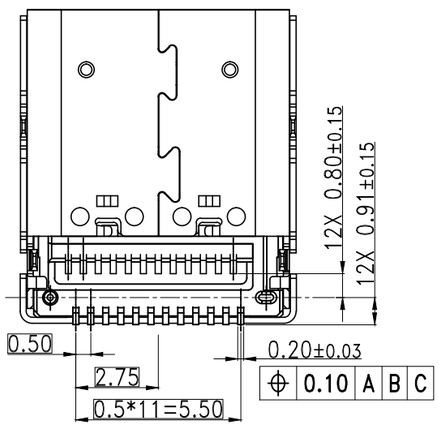


Notes:
1,Material :
Contacts : copper alloy
Shell : Stainless steel.
Housing : High-temperature polymer UL94V-0, black.
2,Plating :
Contacts:contact area 30u" Au, Solder tail gold flash or matte tin, nickel overall.
Shell : Nickel Plating
3.Coplanarity : 0.08Max.
4.Packaging type: carrier tape.
5.Material should be fulfilled Amphenol spec# SSN002
AND Customer Requirements,for halogen free products,
also need to meet SSN004

| GENERAL | TOLERANCE | FILE.NO. | 12401610E4#2A | PART.NO. | 12401610E4#2A | DRAWN | Allan.Lai | MATERIAL | | SCALE | 1:1 |
|---|---|---|---|---|---|---|---|---|---|---|---|
| x.±0.50 | x.°± 5° | REV. | A | TITLE | USB TYPE C CONNECTOR | CHECKED | Weison.lu | DATE | 04/28/17 | UNIT | mm |
| .x±0.38 | .x°± 2° | SIZE | | SHEET | 1 OF 2 | APPROVED | | Amphenol Shouhmin Industry | | | |
| .xx±0.25 | .xx± 1° | A4 | | | | | | | | | |

| REV. | ECN.NO. | MODIFY.CONTENT | DATE |
|---|---|---|---|
| A | | NEW RELEASE | 04/28/17 |
| | | | |

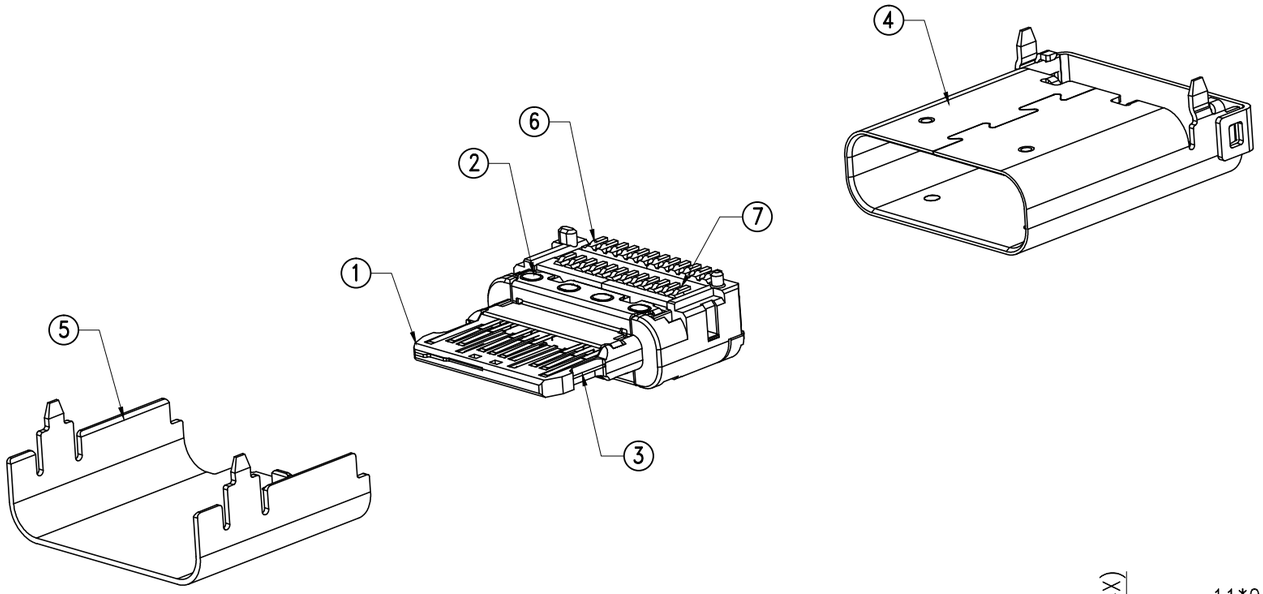


EXPLODE VIEW (SCALE N/A)

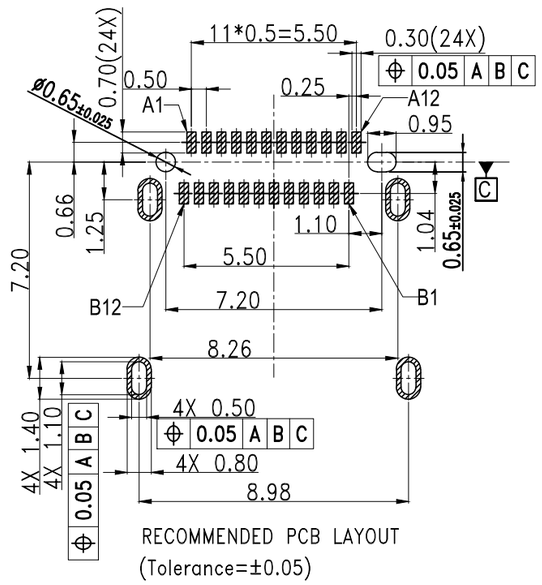


RECOMMENDED PCB LAYOUT
(Tolerance=±0.05)

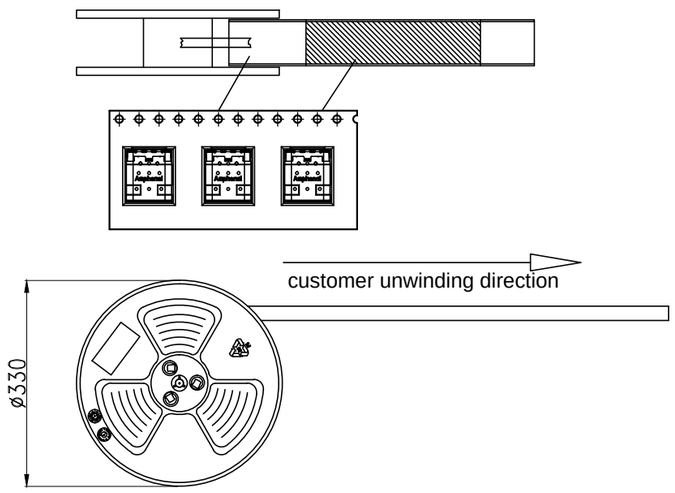


PACK DIRECTION

| ITEM | DESCRIPTION | Q'TY | MATERIAL | FINISH |
|---|---|---|---|---|
| 7 | BOTTOM TERMINAL | 1 | C7025 TM03 | CONTACT:30u" AU MIN; SOLDER TAIL:100u" MATTE TIN MIN; |
| 6 | TOP TERMINAL | 1 | C7025 TM03 | CONTACT:30u" AU MIN; SOLDER TAIL:100u" MATTE TIN MIN; |
| 5 | OUTER SHELL | 1 | SUS304-1/2H | SOLDER NICKEL: 50U" MIN |
| 4 | MAIN SHELL | 1 | SUS304-1/2H | SOLDER NICKEL: 50U" MIN |
| 3 | GND SHEET | 1 | SUS301-EH | SOLDER NICKEL: 50U" MIN |
| 2 | EMC | 2 | SUS304-1/2H | SOLDER NICKEL: 50U" MIN |
| 1 | MAIN HOUSING | 1 | PA46 | BLACK |

BILL OF MATERIAL

| GENERAL | TOLERANCE | FILE.NO. | 12401610E4#2A |
|---|---|---|---|
| x.±0.50 | x.°± 5° | REV. | A |
| .x±0.38 | .x°± 2° | SIZE | |
| .xx±0.25 | .xx± 1° | A4 | |

| PART.NO. | 12401610E4#2A | DRAWN | Allan.Lai |
|---|---|---|---|
| TITLE | USB TYPE C CONNECTOR | CHECKED | Weison.lu |
| SHEET | 2 OF 2 | APPROVED | |

| MATERIAL | | SCALE | 1:1 |
|---|---|---|---|
| DATE | 04/28/17 | UNIT | mm |

Amphenol Shouhmin Industry