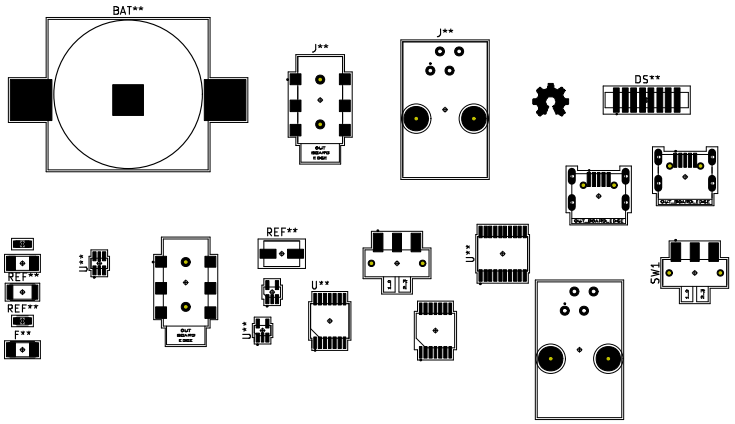

Various footprints in the library
iocapa

Sheet:
File: showcase.kicad_pcb

Title: Showcase for component footprints

Size: A4	Date: 2016-10-02	**Rev: 1.0.0**
KiCad E.D.A. kicad 4.0.2+e4-622538ubuntu16.04.1-stable		Id: 1/1