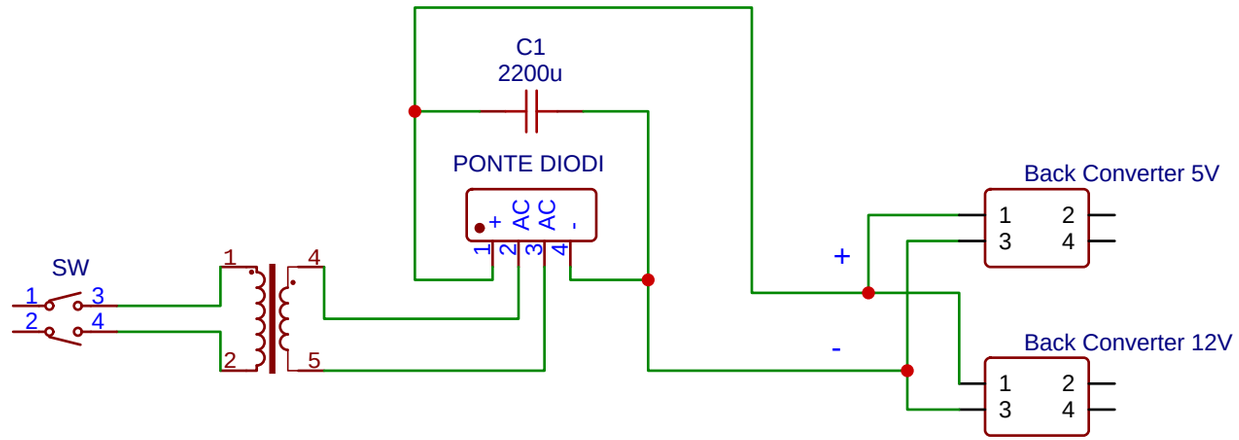

TITLE: Riproduttore CD Audio		REV: 1.0
	Company: IoComeLoFaccio	Sheet: 1/1
	Date: 2024-03-20 Drawn By: exkape	