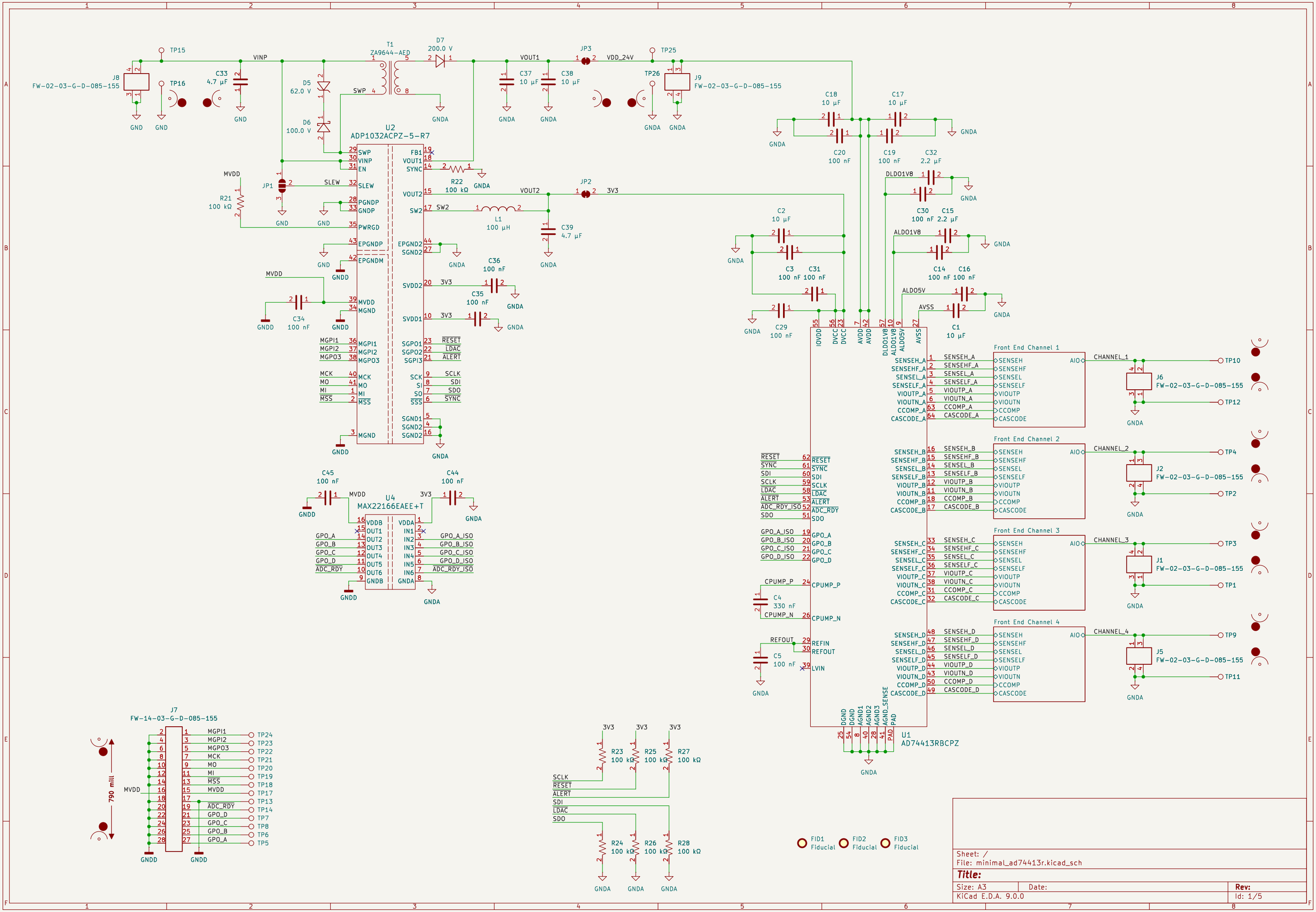

Sheet: /
File: minimal_ad74413r.kicad_sch

Title:

Size: A3	Date:	Rev:
KiCad E.D.A. 9.0.0		Id: 1/5

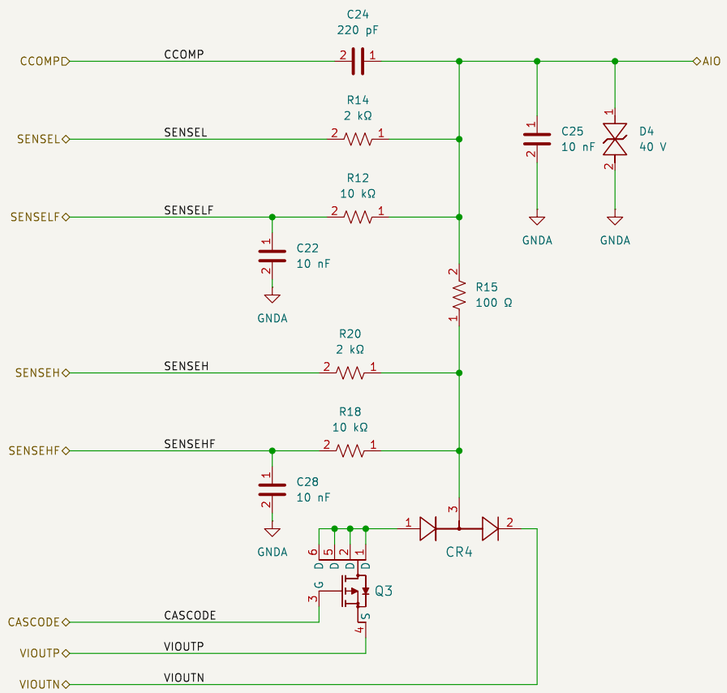

Sheet: /Front End Channel 1/
File: Front End Channel 1.kicad_sch

Title:

Size: A3	Date:	Rev:
KiCad E.D.A. 9.0.0		Id: 2/5

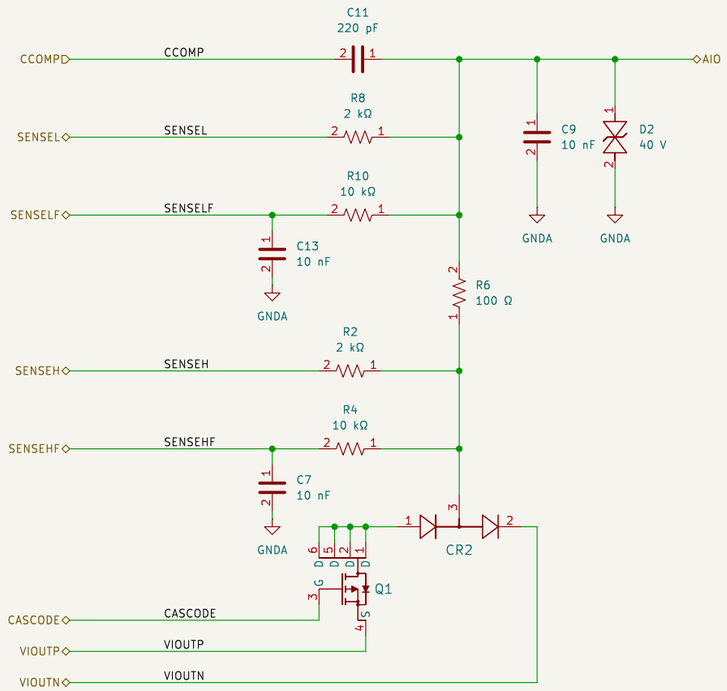

Sheet: /Front End Channel 2/
File: Front End Channel 1.kicad_sch

Title:

Size: A3	Date:	Rev:
KiCad E.D.A. 9.0.0		Id: 3/5

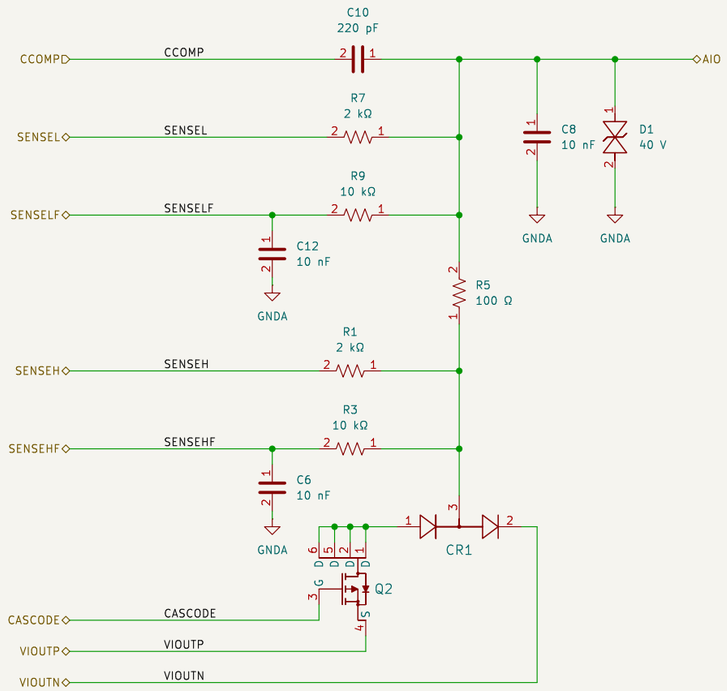

Sheet: /Front End Channel 3/
File: Front End Channel 1.kicad_sch

Title:

Size: A3	Date:	Rev:
KiCad E.D.A. 9.0.0		Id: 4/5

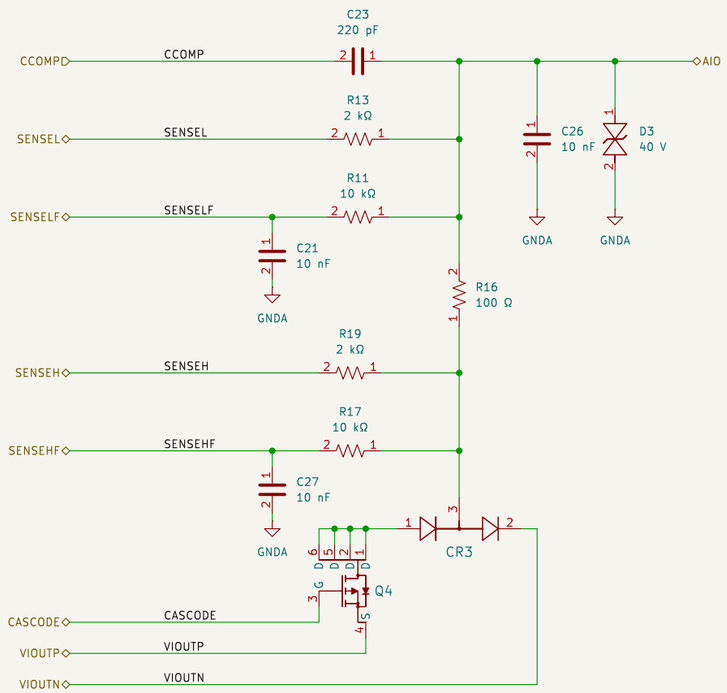

Sheet: /Front End Channel 4/
File: Front End Channel 1.kicad_sch

Title:

Size: A3	Date:	Rev:
KiCad E.D.A. 9.0.0		Id: 5/5