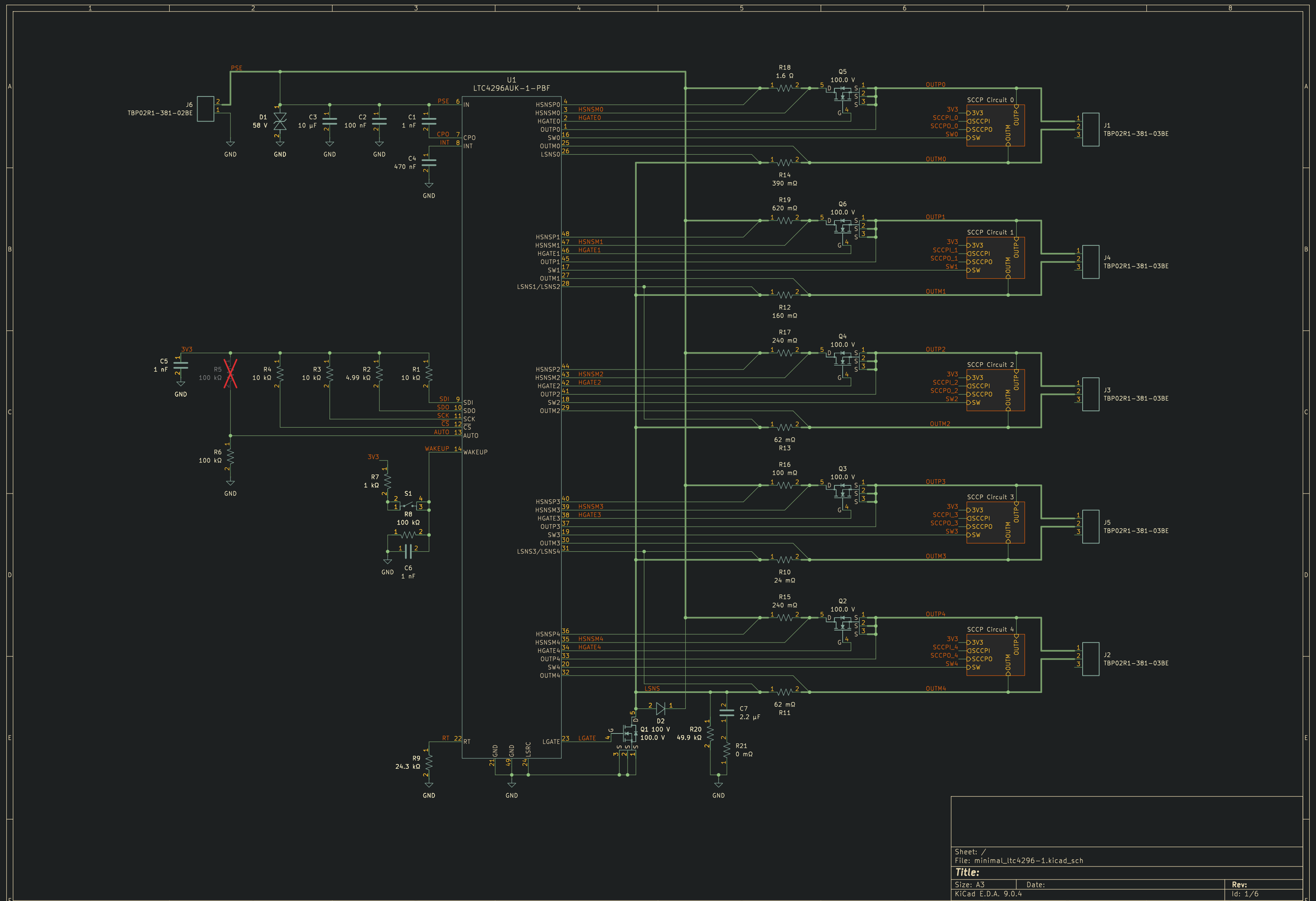

Sheet: /
File: minimal_ltc4296-1.kicad_sch

Title:

Size: A3	Date:	Rev:
KiCad E.D.A. 9.0.4		Id: 1/6

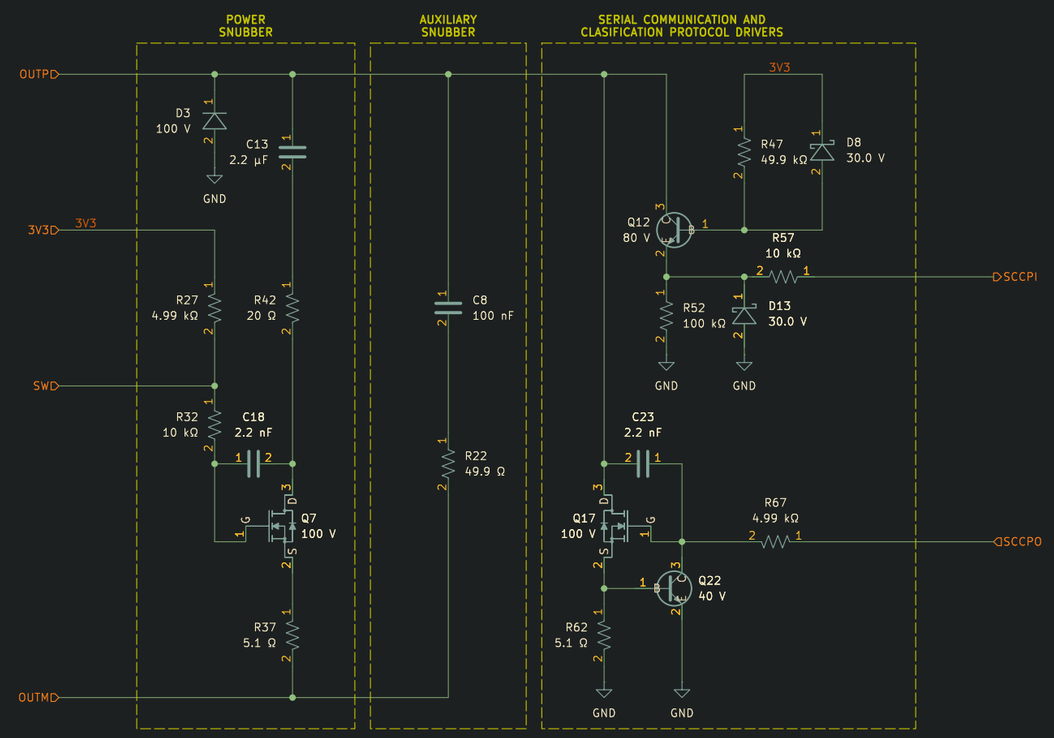

Sheet: /SCCP Circuit 0/
File: SCCP Circuit 0.kicad_sch

Title:

Size: A3	Date:	Rev:
KiCad E.D.A. 9.0.4		Id: 2/6

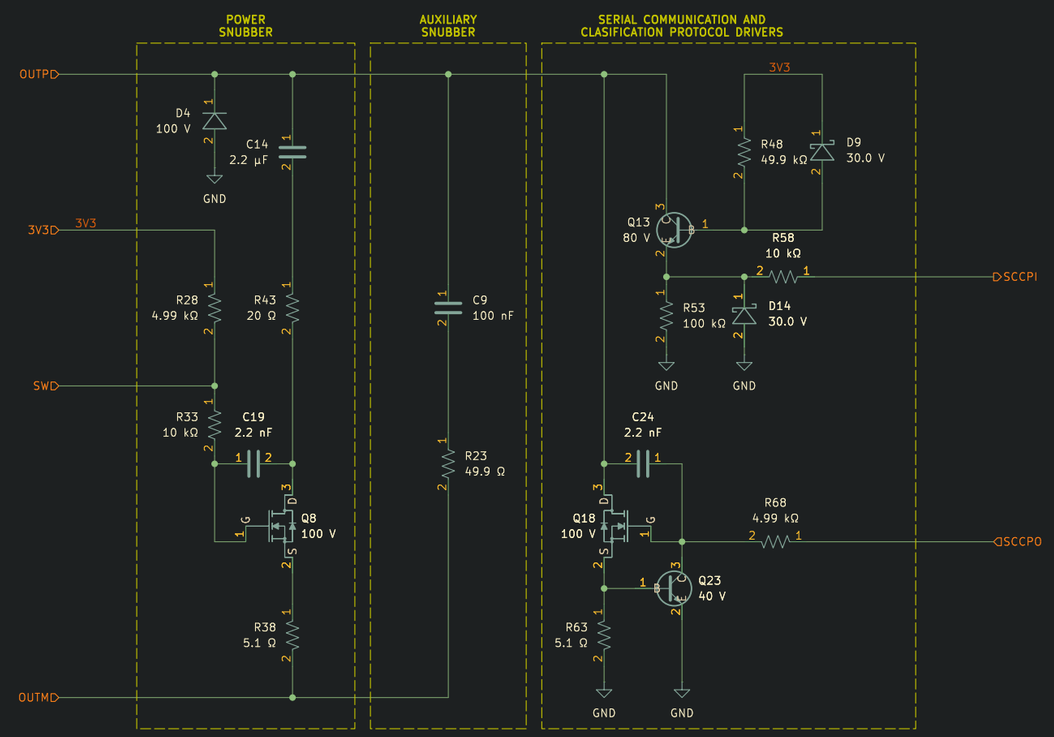

Sheet: /SCCP Circuit 1/
File: SCCP Circuit 0.kicad_sch

Title:

Size: A3	Date:	Rev:
KiCad E.D.A. 9.0.4		Id: 3/6

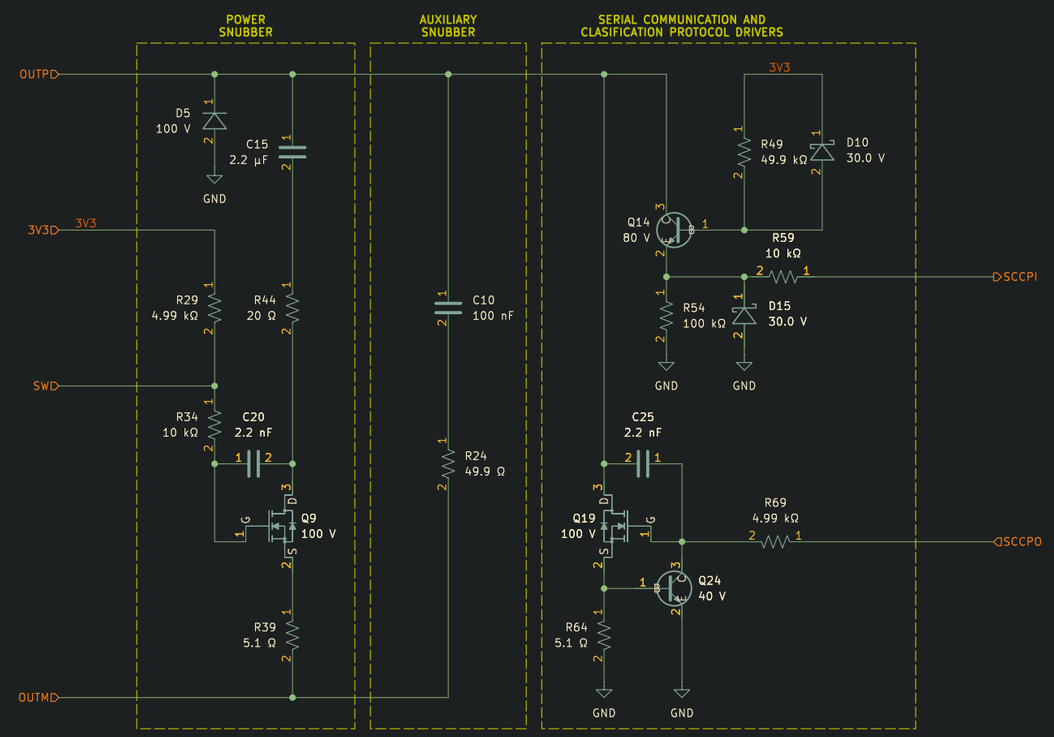

Sheet: /SCCP Circuit 2/
File: SCCP Circuit 0.kicad_sch

Title:

Size: A3	Date:	Rev:
KiCad E.D.A. 9.0.4		Id: 4/6

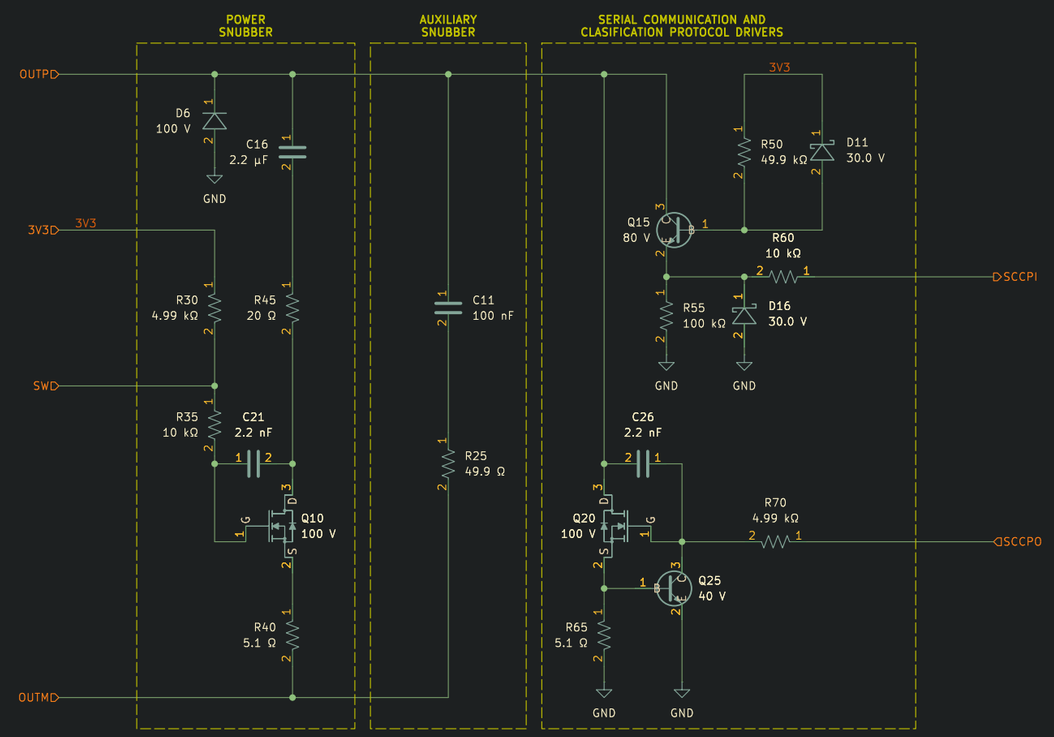

Sheet: /SCCP Circuit 3/
File: SCCP Circuit 0.kicad_sch

Title:

Size: A3	Date:	Rev:
KiCad E.D.A. 9.0.4		Id: 5/6

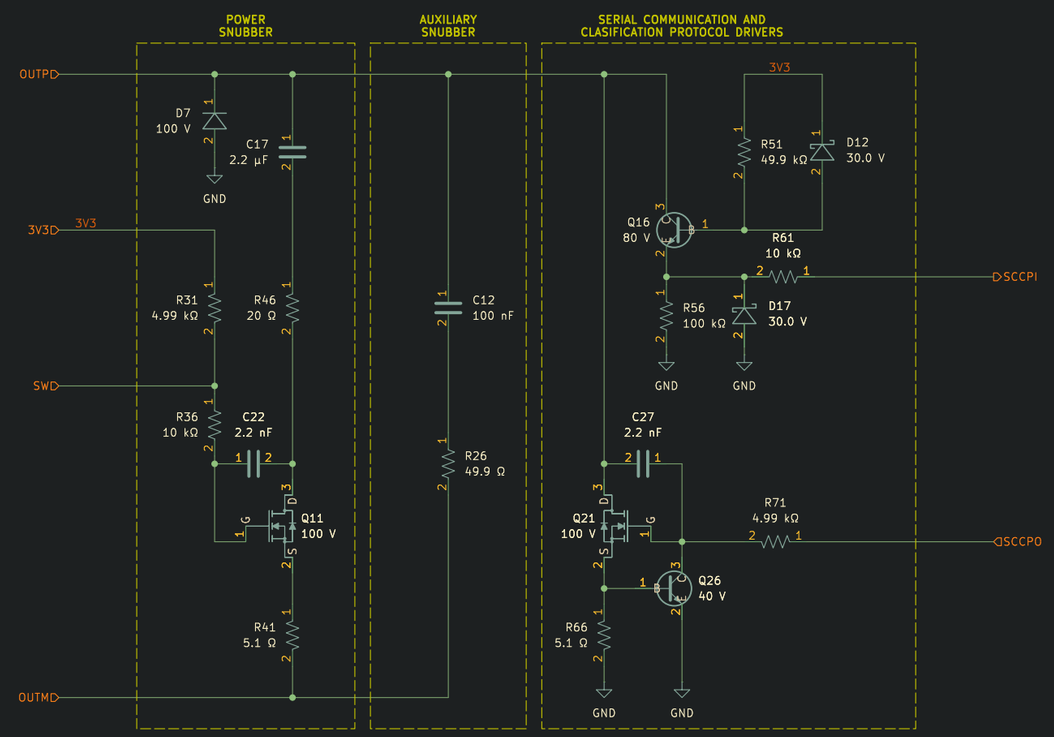

Sheet: /SCCP Circuit 4/
File: SCCP Circuit 0.kicad_sch

Title:

Size: A3	Date:	Rev:
KiCad E.D.A. 9.0.4		Id: 6/6