REVISION HISTORY			
REV	DESCRIPTION	DATE	AUTHOR
-	INITIAL	12/9/2010	

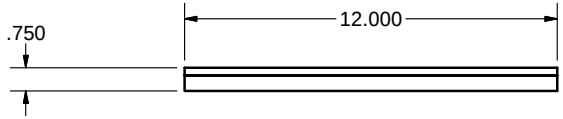

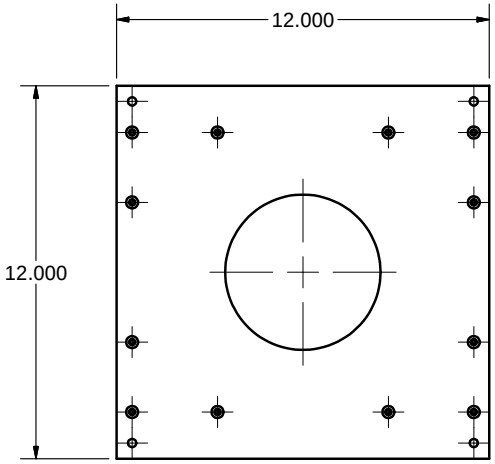

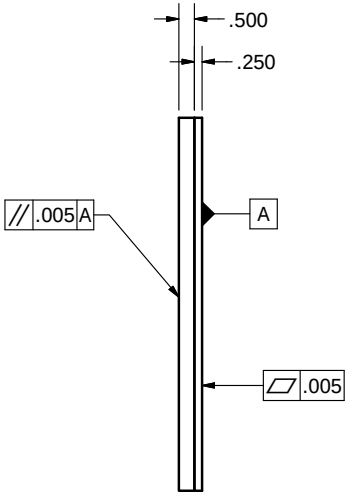

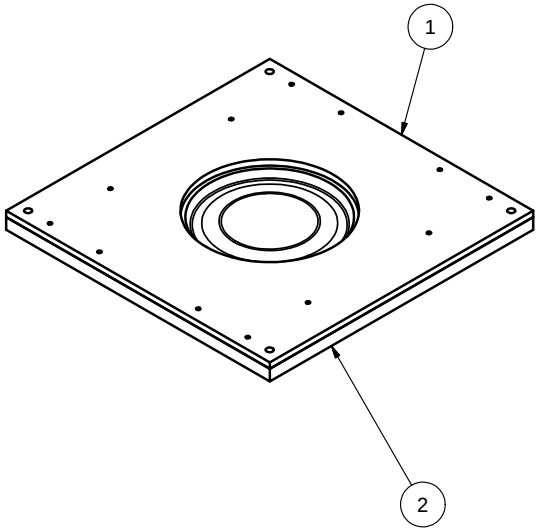

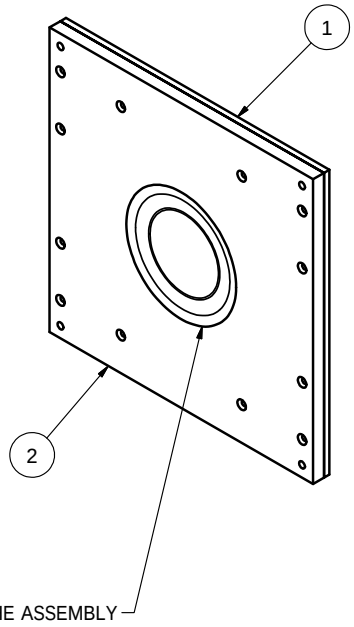

PARTS LIST			
ITEM	QTY	PART NUMBER	DESCRIPTION
1	1	JF-KB-FB0002	SINGLE 12.7 CM FLY WELL SUPPORT
2	1	JF-KB-FB0003	SINGLE 12.7 CM FLY WELL

DRAWN tabachnikt	12/9/2010
MATERIAL	
FINISH	
SURFACE TEXTURE 32	
DIMENSIONS INCLUDE CHEMICALLY APPLIED FINISHES	
THIRD ANGLE PROJECTION:	

HHMI
HOWARD HUGHES MEDICAL INSTITUTE
janelia farm research campus

DESCRIPTION: SINGLE FLY BOWL 5" DIA, WITH SUPPORT

SIZE	PART NO	REV
B	JF-KB-FB0001	

MODEL FILE: JF-KB-FB0001.iam

SHEET 1 OF 1

TOLERANCES IN INCHES UNLESS OTHERWISE NOTED	
.X	± 0.03
X.XX	± 0.010
X.XXX	± 0.005
X.XXXX	± 0.0005
ANGULAR+/- 0.5 DEG	

THIS DRAWING IS NOT TO BE USED OR REPRODUCED WITHOUT PERMISSION FROM THE HOWARD HUGHES MEDICAL INSTITUTE

NOTES: UNLESS OTHERWISE SPECIFIED
1. INTERPRET DIMENSION AND TOLERANCES PER ASME Y14.5M-1994.
2. DEBURR AND BREAK ALL SHARP EDGES, MAX 0.010 UNLESS OTHERWISE INDICATED.
3. PARTS ARE TO BE CLEAN AND FREE OF OIL, GREASE, AND OTHER CONTAMINANTS.