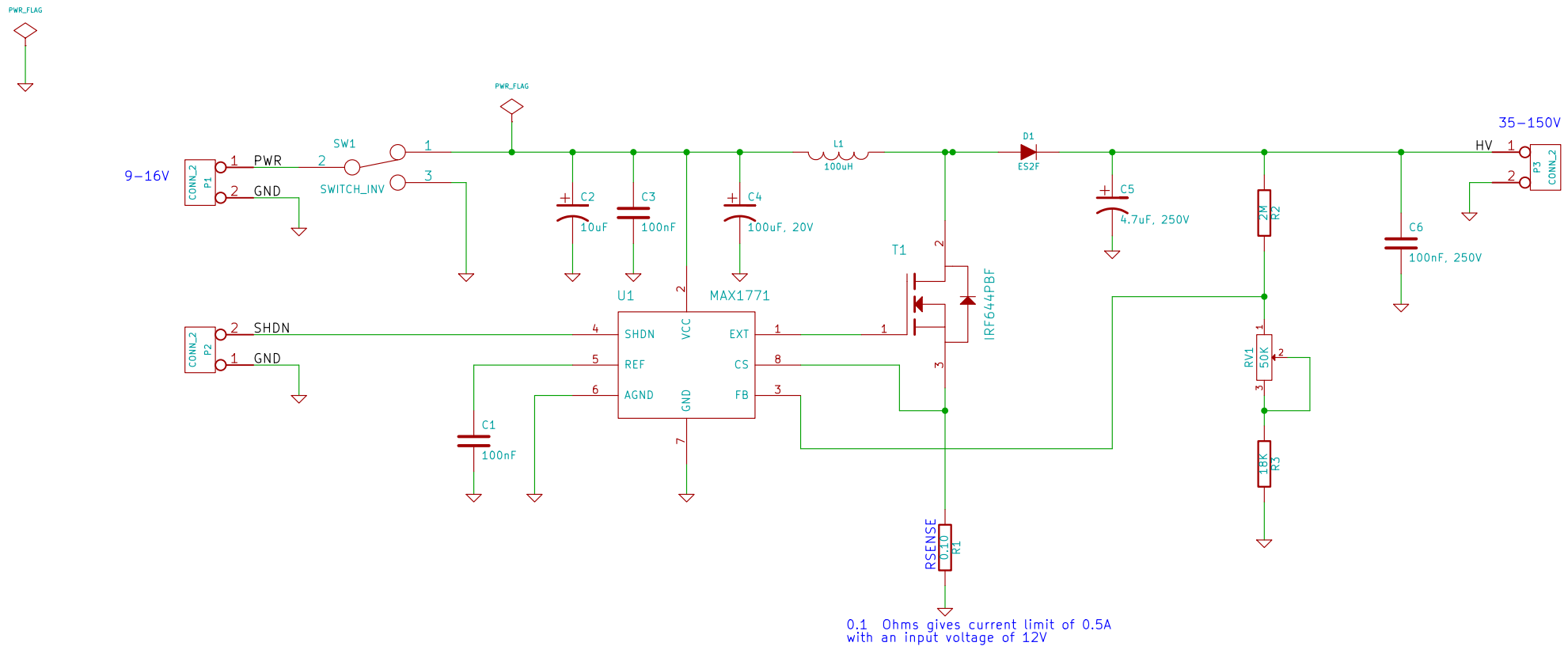

Based on design by Nick de Smith
http://www.desmith.net/NMdS/Electronics/NixiePSU.html

File: hv_switching_psu.sch		
Sheet: /		
Title:		
Size: A4	Date: 29 dec 2012	Rev:
KiCad E.D.A.		Id: 1/1