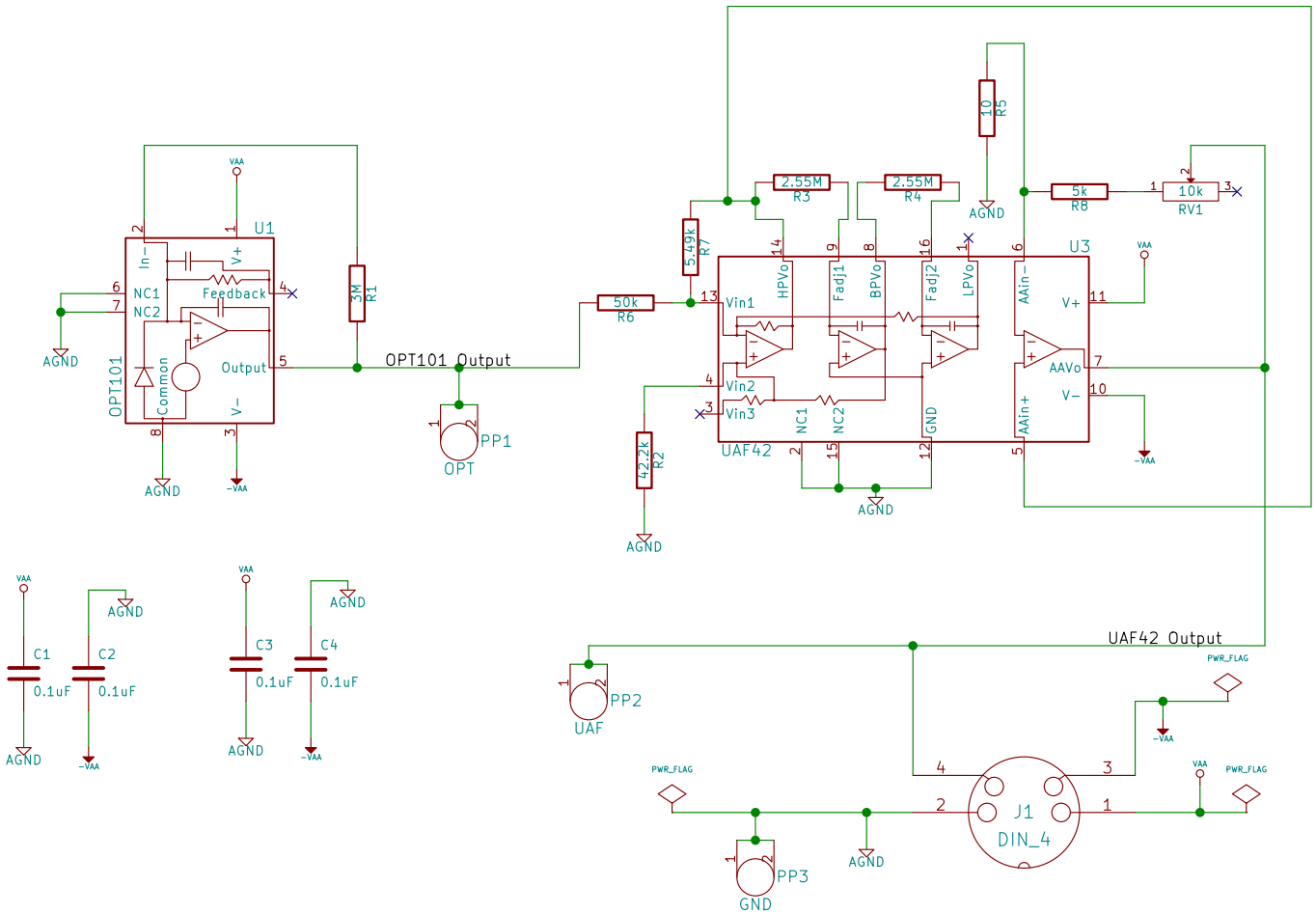

Dickinson Lab		
File:		
Sheet: /home/wbd/repos/iorodeo/light_sensor_boards/Opt101/Opt101.sch		
Title: Opt101		
Size: A	Date: 26 oct 2009	Rev: 2.0
KiCad E.D.A. eeschema (2013-mar-13)-testing		Id: 1/1