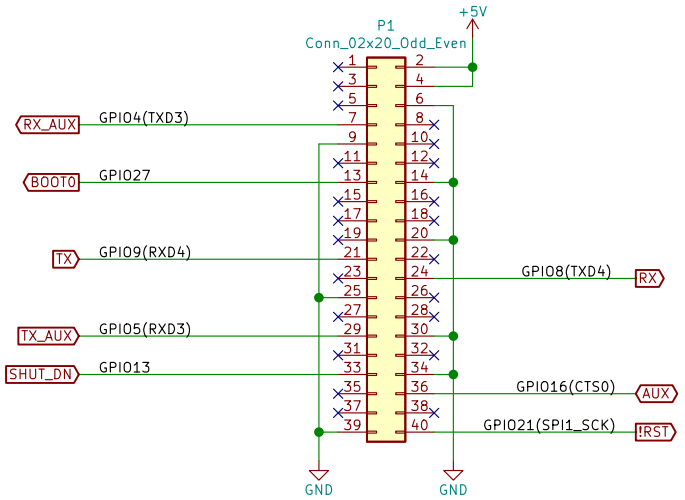

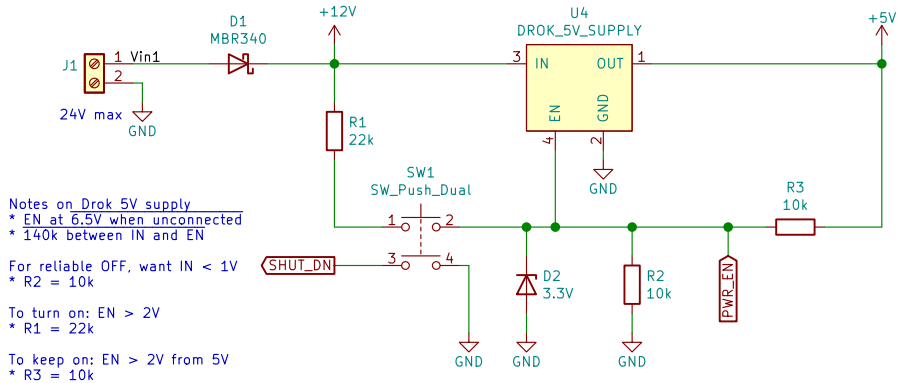

Notes on Drok 5V supply
* EN at 6.5V when unconnected
* 140k between IN and EN

For reliable OFF, want IN < 1V
* R2 = 10k

To turn on: EN > 2V
* R1 = 22k

To keep on: EN > 2V from 5V
* R3 = 10k

To shut off (from uC):
* pull 0.5mA (5V drop on R3)

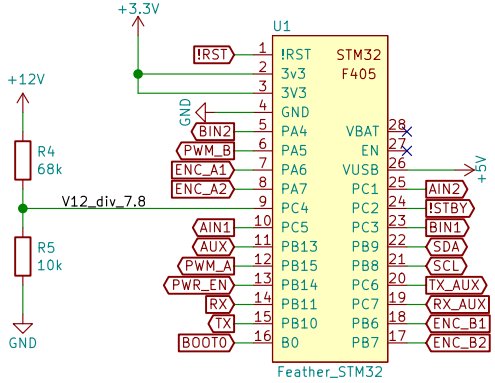

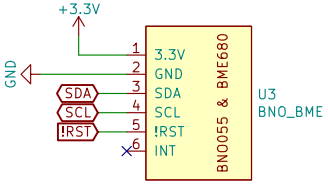

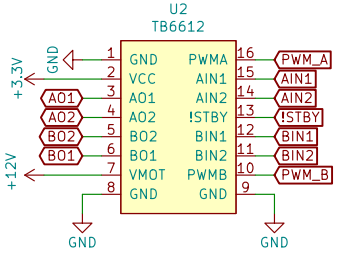

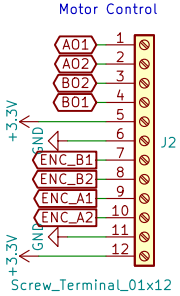

Notes on STM32 configuration:
- USART3 on PB10/PB11 is DFU capable (Pi UART4)
- USART6 on PC6/PC7 is NOT DFU capable (Pi4 UART3, REPL)
- Tim 3 on PA6/PA7 is a 16-bit encoder
- Tim 4 on PB6/PB7 is a 16-bit encoder
- Tim 2 & 5 32-bit encoders not available on Adafruit breakout
- Tim 8 on PA5=CH1N / PB15=CH3N for PWM
- I2C1 not on standard pins: Qwiic connector not functional

Bernhard Boser

iot49

Sheet: /
File: motor_hat.sch

Title: Motor Hat (Breakout)

Size: A4	Date: 2021-03-08	**Rev: v01**
KiCad E.D.A. kicad (5.1.9-0-10_14)		Id: 1/1