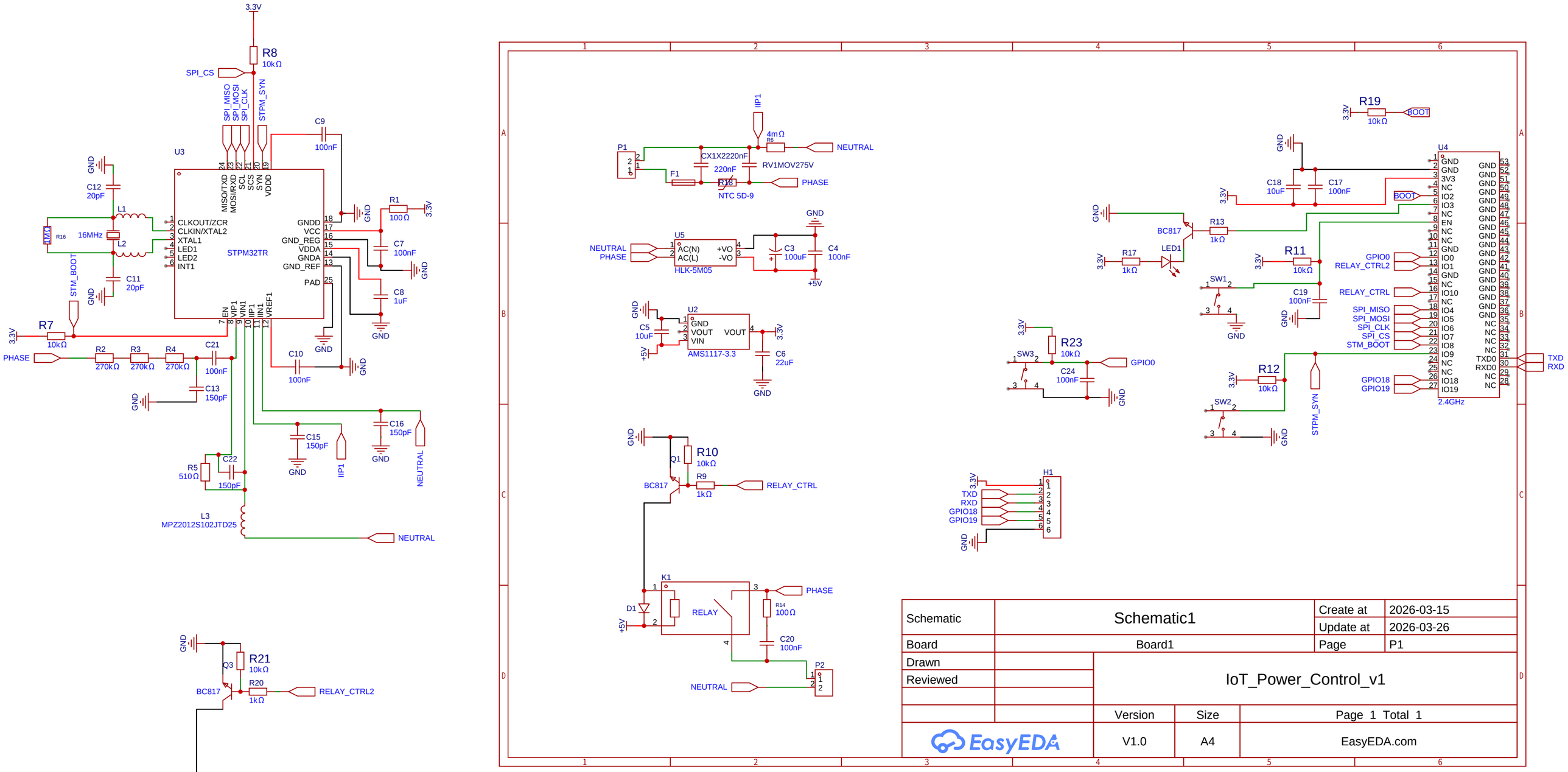

Schematic	Schematic1	Create at	2026-03-15
		Update at	2026-03-26
Board	Board1	Page	P1
Drawn	IoT_Power_Control_v1		
Reviewed			
		Version	Size	Page 1 Total 1
EasyEDA		V1.0	A4	EasyEDA.com